McLAUGHLIN BORING SYSTEMS
MIGHTY MOLE

2006 Perimeter Rd. Greenville, SC 29605
Toll Free: 800-435-9340 - Phone: 864-277-5870
Fax: 864-235-9661 - www.mightymole.com
email: mmole@mightymole.com

OPERATOR'S MANUAL CONTAINS: COMPONENTS AND REPAIR SECTIONS MODEL M-5000 MOLEING MACHINE PART NO. M500000

Machine Serial No.: M5031904101 & Later
Manual Part No.: E250165

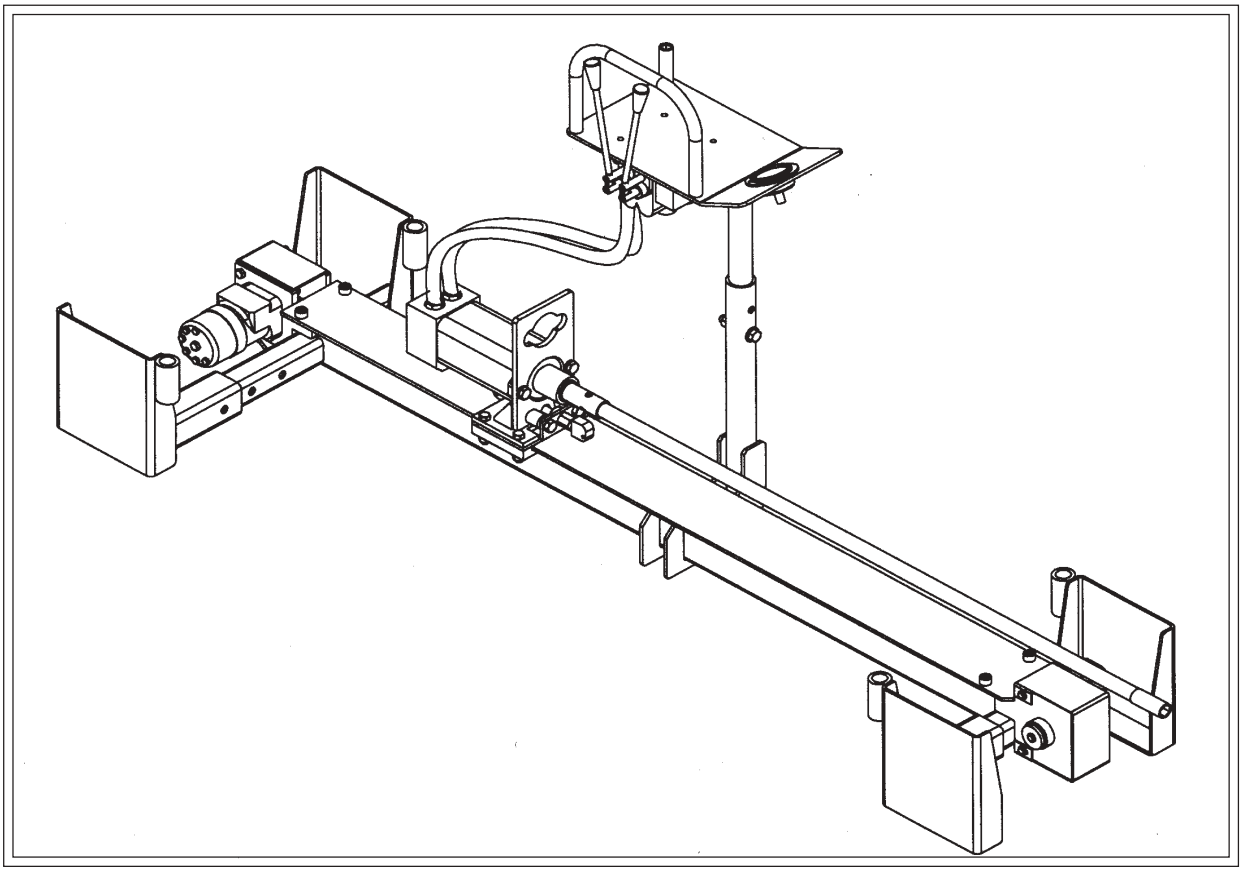

Machine Serial #_____

Purchased &
Serviced Thru: _____

Purchase Date: _____

2002 by McLaughlin Manufacturing Company All rights reserved. No part of this manual may be reproduced in any form or by any means without prior written permission from the McLaughlin Manufacturing Company.

Revision Date: 04.2004

TABLE OF CONTENTS
M-5000

DESCRIPTION	SECTION
Accident Prevention	Insert
Machine Safety and Operation	1.0
Hazard Alert Decal Information	1.1
Hazard Alert Decal Placement	1.2
Location of Controls	1.3
Machine Set-up and Operation	1.3
Notes	1.3
Description and Use of Tools	1.4
Machine Specifications & General Maintenance	2.0
Machine Components	3.0
Warranty and Return Goods Policy	4.0

McLaughlin Manufacturing Company reserves the right to make changes at any time without notice or obligation.

MACHINE SAFETY AND OPERATION
M-5000

Hazard Alert Decals

BE AWARE OF SAFETY INFORMATION: This is the safety-alert sign. This symbol is placed in the manual and on your machine to alert you to potential bodily injury or death.

SIGNAL WORDS

The safety-alert icon is used with the following signal words: DANGER, WARNING and CAUTION. When you see these words in the manual or on decals on your machine, carefully read and follow all instructions. Watch for these words and learn their meanings.

DANGER - Imminent hazard which, if not avoided, will result in death or serious injury.

WARNING - Potentially hazardous situation which, if not avoided, could result in death or serious injury.

CAUTION - Potentially hazardous situation which, if not avoided, may result in minor personal injury or property damage.

READ YOUR OPERATOR'S MANUAL: This machine is designed to produce holes up to 2" by screw comaction in the advance direction, and up to 4 1/2" by screw compaction in the retract direction. It requires both an experienced operator and helper. **NEVER WORK ALONE. READ AND UNDERSTAND OPERATION MANUAL PROVIDED.**

Specific Hazard Alert Decals

UNDERGROUND UTILITIES: Before starting work contact the local "one call" service in advance to mark all underground utilities or call the National One Call Hotline 1-888-258-0808. Make sure all underground utilities have been properly located, paying attention to any questionable areas in the immediate digging or boring area. Expose any utilities by non-destructive means before working.

Inadvertent contact with buried utilities may cause death or serious injury. Contact with electric lines can cause electrocution. Contact with gas lines can cause explosion or fire.

Know where and what type of utilities are in the area and how deep they are located.

MACHINE SAFETY AND OPERATION
M-5000

ENTANGLEMENT HAZARD: The normal use of this machine requires rotating parts, in the form of the drill string, cutting head and reamer, to be exposed in front of the machine.

The machine is to be shut down whenever work is required on the drill string, or any rotating parts. This machine is **NEVER** to be operated with personnel near the drill string.

Never stand on or stradle the drill string, and avoid gloves and loose clothing on the job.

Inadvertent contact with drill rod, cutting head and/or reamer will cause death or serious injury.

Always use a rod guide when positioning drill rods during operation.

When removing cutting head, operator must shut down machine and **REMOVE THE KEY** to the power source - then attend the removal of cutting head on the exit side.

MACHINE UPSET: In order to "screw" the MOLEING HEAD into the ground, the machine must resist the torque applied to the rods by the hydraulic motor. Under normal use the machine is stable, but if the head catches on an obstruction in the ground and the rotation stops suddenly, the machine can upset to the left. All of the machine controls are of the "hold-to-run" safety design. If an underground object is encountered, and it adversely effects the machine, simply release the levers to stop machine.

The drill rods are designed with a limited measure of flexibiltiy to allow insertion into the face with the machine at a different angle or elevation than the tunnel.

Inadvertent contact with underground obstacles may cause the machine to upset.

Operate only in a properly sized pit. (Refer to Specifications page.)
Operate only with all hold-down stakes installed.
Operate only from designated operator position. (Location of Controls

Keep others away from the machine when in operation.

AVOID DEATH OR SERIOUS INJURY

Refer to warning decals on the machine for safety instructions and to the Accident Prevention page of this manual for safety instructions and safe operating procedures.

Hazard Alert Decal Placement

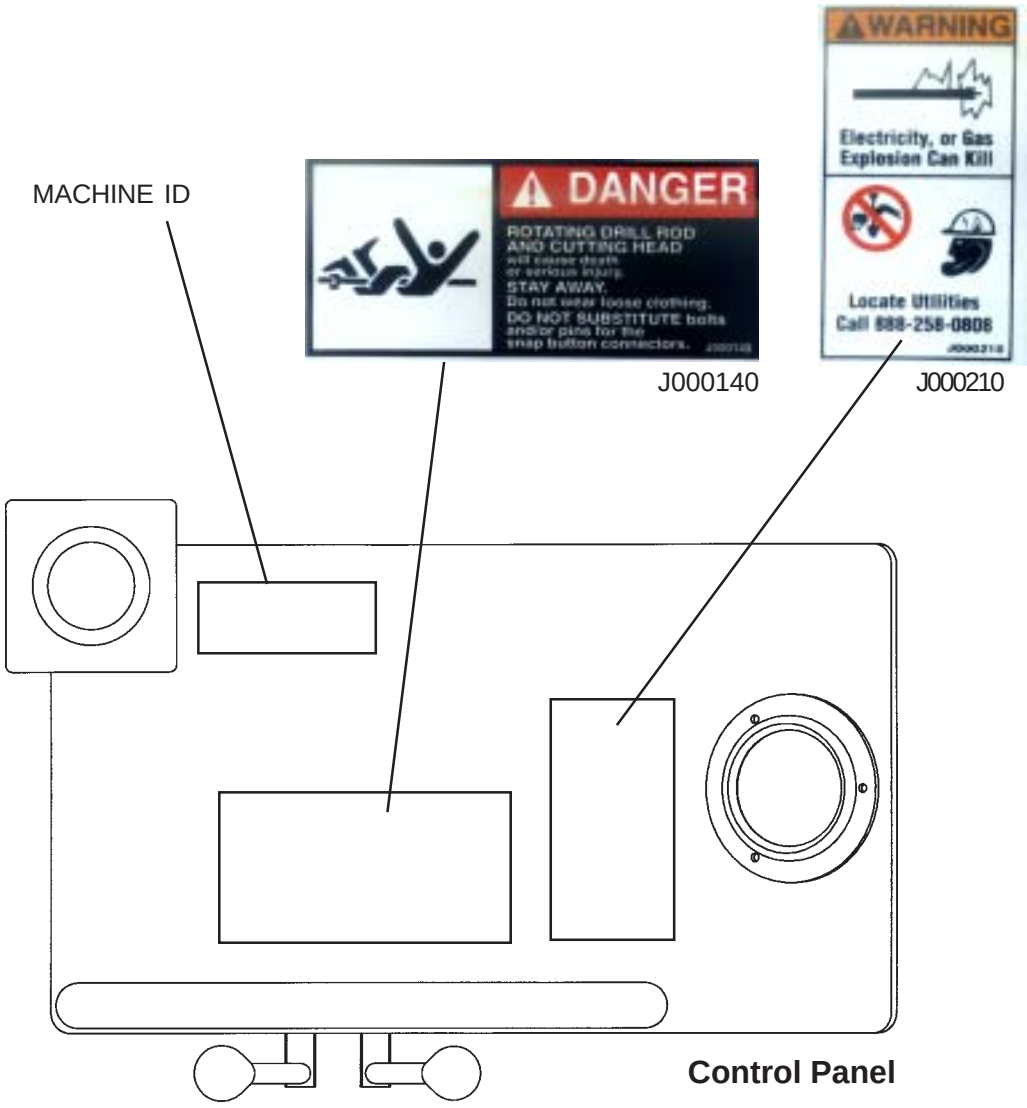

MACHINE SAFETY AND OPERATION
M-5000

LOCATION OF CONTROLS

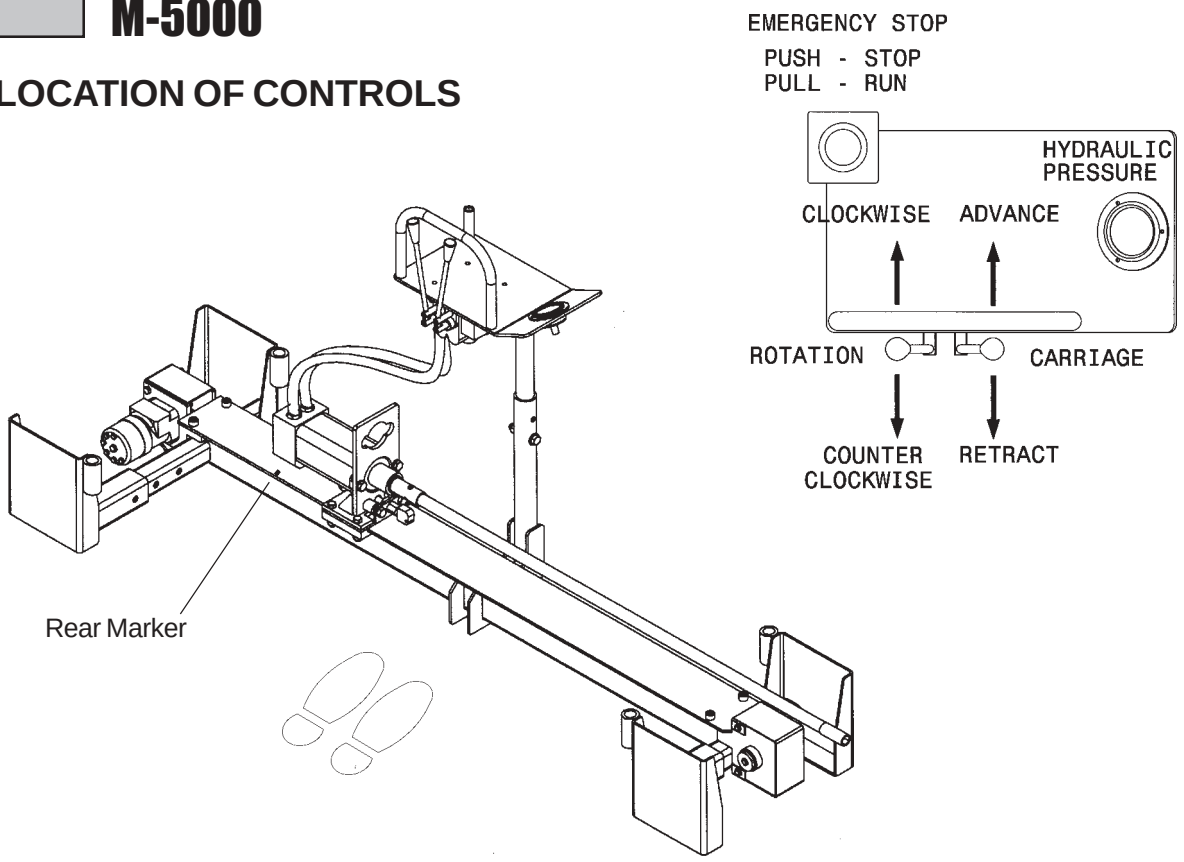

MACHINE SET-UP AND OPERATION

JOBSITE

Before digging, contact the local "one call" service and all other underground plant owners to determine the location of existing services in the path of the proposed bore. DO NOT start excavating or boring until the area has been marked and cleared.

Working excavations more than 4 feet deep, must be constructed in accordance with Federal and local regulations. This is the responsibility of the contractor. McLaughlin Mfg. Co. recommends that the contractor be familiar with all current OSHA regulations.

The working area at the site must be closed to all personnel not directly associated with the job. McLaughlin Mfg. Co. recommends that the exposed rotating rod be GUARDED BY A SAFE DISTANCE. **Only the operator should be in the pit with the machine. The operator must keep feet and limbs away from the rotating rod at all time. Keep feet properly positioned away from the drill string.**

PIT SIZE

The pit must be constructed to the proper dimensions to ensure a proper fit of the machine inside the pit. If the pit is too wide or too long, the machine will move around too much and cause problems in operation.
Refer to the Specification page for proper pit sizes.
This machine can be operated above the ground i.e. no operator in the pit or it can be operated with an operator in the pit with the machine. NOTE: When the opertator is in the pit with the machine, the machine must be used at its widest extended width.

OPERATION

The M-5000 must be powered by an external hydraulic source. The McL-1000 Power Pack is the recommended power source for use with the M-5000. The McL-1000 Power Pack has a remote Emergency Stop switch which must be positioned at the Operators Console while in operation. Refer to Location of Controls Diagram. However, any hydraulic source with the same flow and pressure can be used. Refer to the Specifications section for hydraulic requirements.

Two - 1/2" hydraulic hoses, at least 25', are required to power the machine. The hoses must be properly rated to operater under the conditions given in the Specifica-

tions section. Also, matching hydraulic fittings must be used to connect the power source to the machine.

The PRESSURE hose must be connected to the PRESSURE fitting on the control valve. The pressure port of the control valve has a Femal quick disconnect on it.

The RETURN hose must be connected to the RETURN fitting on the control valve. The return port of the control valve has a Male quick disconnect.

The contol valve has its own intergral relief valve preset at the factory. It is recommended that the hydraulic power source relief valve be set at, or just above, the relief valve of the control valve. Refer to the Specifications section for hydraulic relief valve settings.

Clean the hydraulic disconnects on the machine and on the hydraulic hoses to prevent contaminatin of the hydraulic system.

After the hydraulic connections have been made, start the hydraulic power source. Turn on flow.

The first handle controls the rotation.
- Push handle away from operator - clockwise rotation
- Pull handle toward operator - counter clockwise rotation

The second handle controls the carriage movement:
- Push handle away from operator - Advance
- Pull handle toward operator - Retract

Refer to Location of Controls for machine operation.

DRY BORING
ROD CONNECTION
McLaughlin drill rods use a snap button connector for assembly. This provides a secure, flush connection that will pass through the compacted hole without interference. **DO NOT SUBSTITUTE PINS OR BOLTS FOR McLAUGHLIN SPRING-LOADED BUTTONS.**

STARTING THE BORE
Retract the machine carriage to the rear of the machine. Release the controls. Install the mole with the extension rod into the chuck of the machine. Make sure the snap button engages the corresponding hole in the chuck.
Hold the rod (with the rod guide) level and move the carriage toward the face of the pit. **Do Not Rotate**. Once the mole tip has firmly engaged the face, remove the rod guide. Rotate the rod in the clockwise direction and thrust it into the face at the proper speed. (The mole has a pitch of 1" per revolution. Therefor, 60 rpm equals about 60 inches per minute. The thrust of the machine must match the head speed). Continue until the carriage reaches the stop at the end of the machine.

ADDING DRILL RODS
Rotate the chuck until the snap button is in the top position. Install the uncoupler and retract the carriage - without rotating - until the chuck slides off of the end of the rod coupling. Remove the uncoupler.
Fully retract the carriage. Release the controls.
(When adding subsequent rods, always make the connection with the rod in the ground first and make the chuck connection last.) Install another rod onto the one in the ground and ensure that the snap button lines up with the the hole on the new rod. Advance the head until it reaches the rod and install the rod guide.
Rotate the chuck until the hole in the chuck and the snap button are in-line. Advance the head until it shoulders properly onto the rod coupling and ensure that the snap button is properly seated in the chuck. Continue this procedure until the exit pit is reached.

REMOVING THE MOLE
Drill the rod into the exit pit so that the snap button connection is exposed. Shut the power source off and **REMOVE THE KEY. TAKE THE KEY TO THE EXIT PIT WHILE REMOVING THE MOLE.**

REMOVING DRILL RODS
Retract the carraige until it reaches the
Rear Marker. Install the uncoupler and retract the carriage - without rotating - until the chuck slides off of the rod. Move the uncoupler to the connection at the other end of the rod. Install the uncoupler and separate the two rods by hand.
Advance the carriage until it reaches the rod. Rotate the chuck until the hole in the chuck and the snap button are in-line. Advance the carriage until it shoulders properly onto the rod coupling and ensure that the snap button is properly seated in the chuck. Continue this procedure until all rods are removed.

PULL BACK
Once the 1st pass bore is complete, there are a few options for installing services.
1. Install the service by hand.
Ensure that the hole is sized to receive the service. Remove the drill rods and install the service.
2. Install the service using the machine. Make sure the hole is sized to receive the service.
Add a Pulling or Return Swivel to the rod in the exit pit. Make sure the snap button engages the female coupling. Connect the service to the swivel using a properly sized Shackel and Kellem Grip.
Do not rotate the drill string during pullback. Continually observe the service being pulled into the hole. Remove the drill rods. The service will follow the rods into the entrance pit. **DO NOT GUIDE THE SERVICE BEING INSTALLED BY HAND.**

3. Install the service using a Reamer.*
A reamer will enlarge the hole as it is pulled back into the entrance pit.
Install a properly sized reamer to the rod in the exit pit. Refer to DESCRIPTION AND USE OF TOOLS for proper Mole and Reamer combinations. Make sure the snap button engages the female coupling. Connect the service to the swivel using a properly sized Shackel and Kellem Grip.

Once the Reamer has entered the hole, rotate the rod Clock Wise and retract it into the face at the proper speed. (The reamer has a pitch of 1" per revolution. Therefor, 60 rpm equals about 60 inches per minute. The retract speed of the head must match the rotation speed of the reamer). Continue removing the drill rods until the reamer reaches the entrance pit. Use the Uncoupler to disconnect the reamer from the rod and pull the reamer and service into the entrance pit. **DO NOT ATTEMPT TO GUIDE THE SERVICE BY HAND.**

*Reaming larger than 2 7/8" diameter should be done in a stepped operation. Use a smaller reamer first followed by the desired larger size.

WET BORING
Wet Boring uses water during the boring process to aid in spoil removal. Since water is involved, there are some additional components that are necessary for wet boring.

WET BORING COMPONENTS
Water Swivel*
Wet Rods - 36" (91.5 cm) Rod Length.
Wet Head
Wet Reamer
* Using a swivel will shorten the usable rod length by 12" (30.5cm).
McLaughlin Mfg. Co. provides a "U-Clip Type" wet rod connection. This incorportates a male and female hex, an o-ring and a u-clip.

STARTING THE BORE
Retract the machine carriage to the rear of the machine. Release the controls. Install the cutting head with the extension rod into the chuck of the machine. Line up the rod and the chuck and install the u-clip. Make sure the u-clip is flush with the top of the rod. Install the rod guide and advance the carriage until the head is flush with the face of the pit. Level the rod and thrust the tip of the head into the face of the pit. **Do Not Rotate**. Once the tip of the head has firmly engaged the face, remove the rod guide. Turn on the water supply and confirm that water is coming out of the cutting head. Rotate the rod in the clockwise direction and thrust it into the face.
Continue until the head reaches the stop at the end of the machine.

ADDING DRILL RODS
Rotate the chuck until the u-clip is in the top position. Use a flat head screwdriver to remove the u-clip. Fully retract the carriage. Release the controls. (When adding subsequent rods, always make the connection with the rod in the ground first and make the chuck connection last.) Install another rod onto the one in the face and install the u-clip. Make sure the u-clip is flush with the top of the rod. Advance the carriage until it reaches the rod. Install the rod guide. Rotate the chuck until the hex in the chuck and rod are in-line. Advance the carriage until it shoulders properly onto the rod coupling and install the u-clip so it is flush with the top of the rod. Continue this procedure until the exit pit is reached.
REMOVING THE CUTTING HEAD
Drill the rod into the exit pit so that the u-clip connection is exposed. Shut the power source off and

REMOVE THE KEY. TAKE THE KEY TO THE EXIT PIT WHILE REMOVING THE MOLE.

REMOVING DRILL RODS

Retract the carraige until it reaches the Rear Marker. Use a flat head screwdriver to remove the u-clip. Retract the carriage until the chuck slides off of the rod. Remove the u-clip and separate the two rods by hand.

Advance the carriage until it reaches the rod. Rotate the chuck until the hex in the chuck and the rod are in-line. Advance the carriage until it shoulders properly onto the rod coupling and install the u-clip. Continue this procedure until all rods are removed.

PULL BACK

Once the bore is complete, there are a few options for installing services.

1. Install the service by hand.

Ensure that the hole is sized to receive the service. Remove the drill rods and install the service.

2. Install the service using the machine. Make sure the hole is sized to receive the service.

Add a Pulling or Return Swivel to the rod in the exit pit. Install the swivel and install the u-clip. Make sure the u-clip is flush with the top of the rod. Connect the service to the swivel using a properly sized Shackel and Kellem Grip.

Do not rotate the drill string during pullback. Continually observe the service being pulled into the hole. Remove the drill rods. The service will follow the rods into the entrance pit. **DO NOT GUIDE THE SERVICE BEING INSTALLED BY HAND.**

3. Install the service using a Reamer.

A reamer will enlarge the hole as it is pulled back into the entrance pit.

Install a properly sized reamer to the rod in the exit pit. Install the u-clip and make sure the u-clip is flush with the top of the rod. Connect the service to the swivel using a properly sized Shackel and Kellem Grip. Turn on the water supply and confirm that water is coming out of the reamer.

Once the Reamer has entered the hole, rotate the rod Clockwise and retract it into the face at the proper speed. Continue removing the drill rods until the reamer reaches the entrance pit. Remove the u-clip and disconnect the reamer from the rod and pull the reamer and service into the entrance pit. **DO NOT ATTEMPT TO GUIDE THE SERVICE BY HAND.**

NOTES
M-5000

DESCRIPTION AND USE OF TOOLS - DRY BORING
M-5000

FOR OTHER TOOLING OPTIONS REFER TO MOLING TOOLS CACATALOG

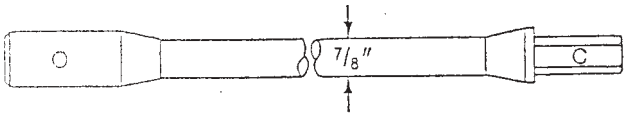

Standard Drill Rod 7/8" diameter (22.2mm), x 5', 10', and 20' lengths (1.5, 3, and 6 m). Supplied with either the standard 13/16" (20.64 mm) hex shank and socket with snap button connector, or the 1" (25.4 mm) hex Bulldog Connector.

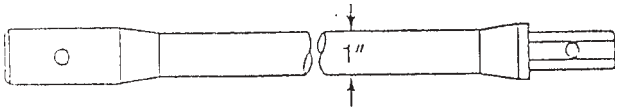

Heavy Duty Drill Rod 1" diameter (25.4mm), x 5', 10', and 20' lengths (1.5, 3, and 6m). Supplied with either the standard 13/16" (20.64 mm) hex shank and socket with snap button connector, or the 1" (25.4 mm)Bulldog Connector.

1 1/4" Mole. This is the smallest tool in the McLaughlin line. It is used primarily for the installation of small residential gas services (5/8" plastic). It is recommended for 25' to 30' (6.35 M - 7.62 M)(residential street crossings, with no reaming involved.) **THE SWIVEL SHANK CANNOT BE USED WITH THIS TOOL. NOT AVAILABLE WITH BULLDOG SHANK.**

1 3/8" Mole. The Sand Mole is to be used only in sandy soil conditions where any degree of compaction is impossible. Usually no reaming pass is possible because the hole will collapse after the Sand Mole has passed through. The Swivel Shank can be used with this tool to retrieve small diameter electrical cable or similar services. **NOT AVAILABLE WITH BULLDOG SHANK.**

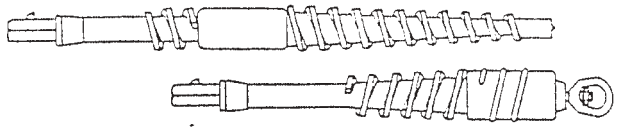

1 7/16" Mole. This tool is used in conjun
the 2" Reamer. It is also used when the ground is very hard in the late fall and early winter. The reasoning behind this method is that there is very little displacement of the soil at any one time and the bore has a greater chance of success.

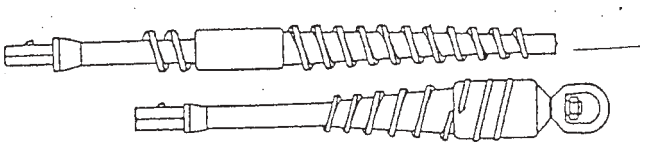

1 3/4" Mole. This tool is used in conjunction with the 2 1/2" Reamer, and is the most widely used tool. Most utility work will fall somewhere within this range. Installation of the service can be accomplished by reaming and pulling the service through simultaneously, or if the hole is large enough on the initial pass, the Swivel Shank can be used to pull the service through as the rods are withdrawn. Supplied with either the standard 13/16" (20.6 mm) hex shank, or the 1" (25.4mm) hex Bulldog Connector.

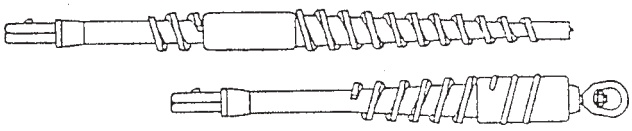

2" Mole. This Moleing Head is to be paired with the 2 7/8" Reamer for maximum effectiveness. It can also be used in conjuction with the Swivel Shank when enlarging the hole is not necessary. Supplied with either the standard 13/16" (20.6mm) hex shank, or the 1" (25.4mm) hex Bulldog Connector.

DESCRIPTION AND USE OF TOOLS - DRY BORING
M-5000

FOR OTHER TOOLING OPTIONS REFER TO MOLING TOOLS CACATALOG

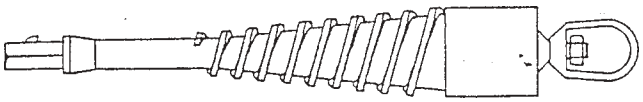

3 1/4", 3 1/2"and 4 1/2 Reamers. Whenever these tools are used, the soil condition must be ideal. By using these tools, 2" water and gas lines can be installed together with their connecting couplings. However, in some cases where the service is very heavy and awkward to handle underground, i.e. copper with large hex coupling, or plastic pipe that tends to snake in the hole, a cable or chain can be pulled through by the Reamer, and then attached to a backhoe to pull through the service. Supplied with either the standard 13/16" hex shank, or the 1" hex Bulldog Connector.

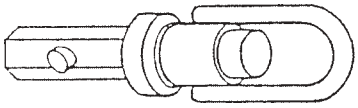

Swivel. This tool can be used with any Mole except the 1 1/4" (M-157200). Use this tool when no addtional reaming is needed.

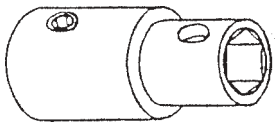

Adapter. For M-1800, and M-427 Gasoline and Hydraulic Machines. This component is a replacement part normally permanently coupled to the machine.

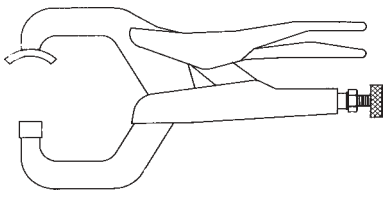

Uncoupler. Used for disenganging 13/16" (20.6mm) and 1" (25.4mm) snap button connectors on standard or heavy duty drill rods.

Rod Guide. PT# M157100 - Used at the start of the bore to locate and level the Mole and first rod at the entry face. At all times the helper is out of the trench and holding the ROD GUIDE while standing on the right hand side of the trench. **ROD GUIDE IS REMOVED AFTER 1/2 OF THE LENGTH OF THE FIRST ROD HAS BEEN INSTALLED. ALWAYS USE GUIDE TOOL WHEN POSITIONING ROTATING DRILL RODS.**

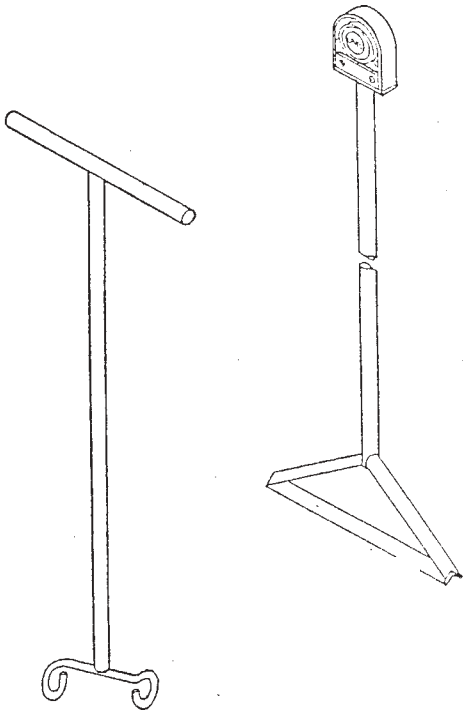

Devil Level. Used to determine the difference between the angle to the rod being installed and actual horizontal level. Always shut down the machine before using the level. Check as close to the face as practical. Keep base of tool clean to obtain accurate readings. Each one degree is a rise or fall of approximately 20 inches (50.8 cm) in 40 feet (12.2 M).

Moleing heads, reamers, adapters, and swivels are supplied with the proper hex size to match the rods being used. Always use a complete string of either standard or heavy duty rods, and select the tool with the proper hex to match the rods.

Refer to McLaughlin's Drilling Tools catalog for the complete line of moleing tools and accessories.

MACHINE SPECIFICATIONS
M-5000

Hydraulic Powered Boring Unit

	ENGLISH	METRIC
Boring Range		
Bore	1 1/4" - 2 1/2"	3.175cm -6.35cm
Reams	2" - 4 1/2"	7.8cm - 17.71 cm
Torque:	520 ft*lbs @ 2500psi	705 Nm @ 170 BAR
Speed:	80 RPM @ 8 GPM	80 RPM @ 30 LPM
Thrust:	1000 Lbs Push/Pull	4448 N
Dimensions		
Length:	78"	198 cm
Width:	18" to 24"	46 cm to 61 cm
Height:	38 1/2"	97.79 cm
Centerline Height:	10 1/8"	26 cm
Weight:	280 lbs	122 kg
Hydraulic Requirements		
Flow	8-12 GPM	30-48 LPM
Pressure	2500 psi	170 BAR
Hydraulic Quick Disconnects	Parker NS-751 and NS-752 or equivilent.	
Pit Dimensions		
Length:	78"	198 cm
Width:	18" to 24" *	46cm to 61 cm*

McLaughlin Manufacturing Company reserves the right to make changes at any time without notice or obligation.

Maintenance

Daily
Clean hydraulic quick disconnects before and after each use.
Check all fasteners before each use.
Check thrust chain tension and adjust if necessary.
Lubricate all snap button connections.

Monthly
Remove sprocket covers and clean chain.
Check sprockets, keyways and set screws. Replace if necessary.
Remove slave sprocket and shaft, clean and regrease bushings.
Regrease chain after cleaning.

Water Swivel
Do not run the swivel dry.
If swivel leaks, replace seals.

MAINTENANCE RECORD
M-5000

Service Performed	Date

MACHINE COMPONENTS
M-5000

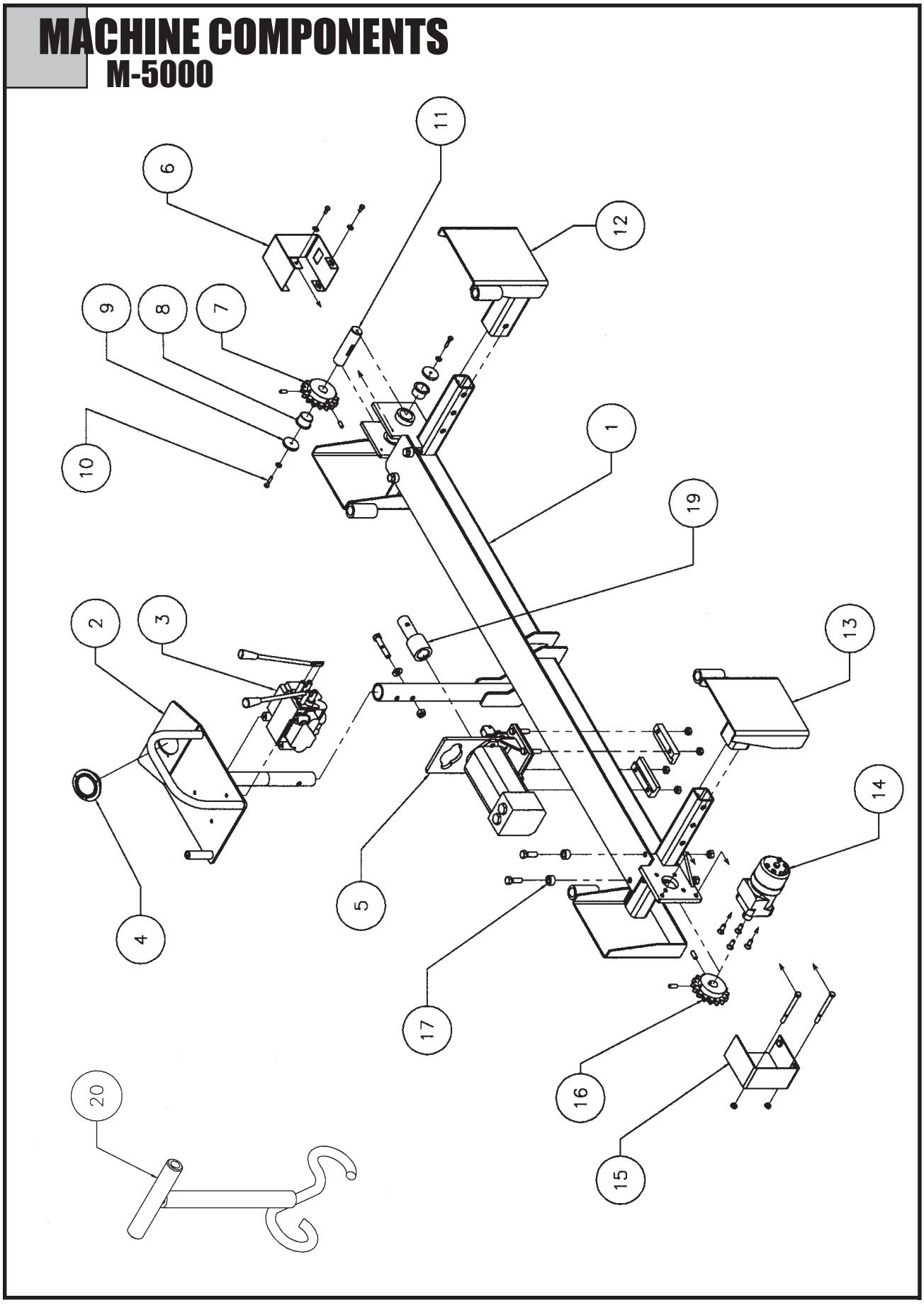

MACHINE COMPONENTS
M-5000

ITEM #	QTY.	NUMBER	DESCRIPTION
1	1	M500001	Frame
2	1	M500016	Console Mtg. Plate
	1	U000920	Screw, HC .500-13 X 2.75
	1	U200100	Washer, Flat .500
	1	U100120	Nut, Hex .500-13
3	1	HD30550	Valve
		M50005701	Valve Handle, Left
		M50005702	Valve Handle, Right
4	1	HM00092	Pressure Gauge
	3	U010003	Screw, RD, HD #6-32 X .750
	3	U100005	Nut, Hex #6-32
	3	U210004	Washer, Lock #6-32
5	1	M500041	Top Head Assembly
6	1	M500064	Sprocket Guard, Front
	2	U000020	Screw, HC .250-20
	2	U210020	Washer, Lock .250
7	1	8080223	Front Sprocket
	2	U021120	Screw, Set .375-18 X 1.00
8	2	8080003	Bushing
9	2	M500068	Sprocket Cap
10	2	U000080	Screw, HC .250-20 X 1.250
	2	U200020	Washer, Flat .250
11	1	M500034	Sprocket Shaft
	1	U410091	5/16 SQ Key (Not Shown)
12	1	M500030	Adjustable Foot, Front
	1	U360010	L-Pin with R-clip
13	1	M500001	Adjustable Foot, Rear
	1	U360010	L-Pin with R-Clip
14	1	T200070	Hydraulic Motor
	1	U400040	Key, Woodruff .25 X 1.0 #15
	4	U010080	Screw, SFH .375-16 X 1.00
15	1	M500022	Sprocket Guard, Rear
	2	U000600	Screw, .375-16 X 4.00
	2	U100060	Nut, Jam .375-16
16	1	8080219	Motor Sprocket
	2	U021020	Screw, Set .312-18 X .375
17	4	U000860	Screw, HC .500-13 X 1.75
	4	M500065	Spacer
18	1	M500057	#60 Chain (Not Shown)
	2	P600210	Master Link #60 Chain
19	1	M500051	Chuck, 13/16 Hex
	1	U000425	Screw, HC .375-16 X 1.00
	1	U210060	Washer, Lock .375
20	1	M500093	Rod Guide
	4	HD71000	Hold Down Stakes(Not Shown)

HYDRAULIC COMPONENTS
M-5000

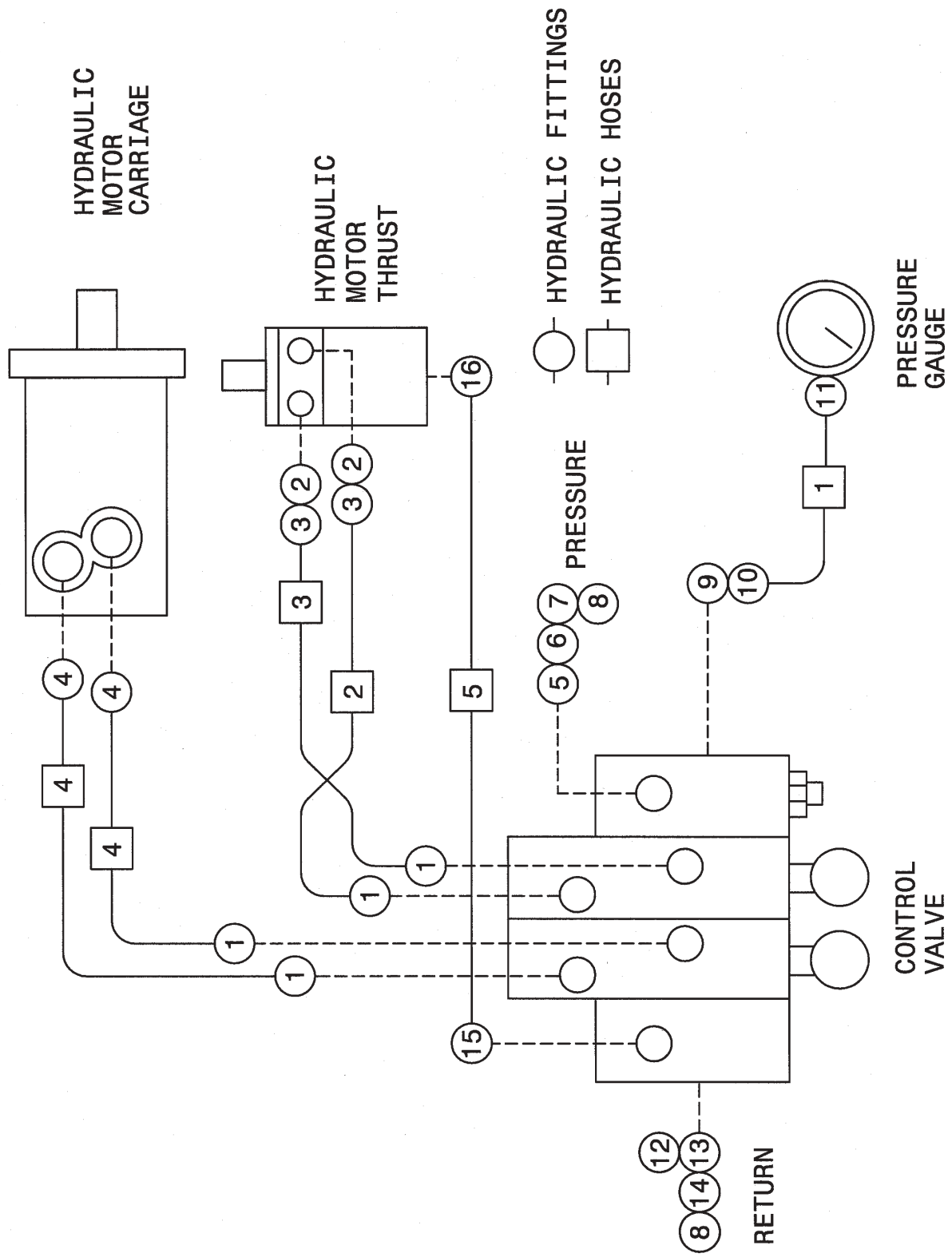

#	NUMBER	QTY.	DESCRIPTION
1	T400135	4X	Union, 08MB - 06M3
2	T400040	2X	Union, 08MP - 08M3
3	T400705	2X	Union, 08F3 - 06M3
4	T400035	2X	Union, 10MB - 06M3
5	T401310	1X	Elbow, 10MB - 08FP X 90
6	T404030	1X	Union, 08MP - 12MP
7	T412001	1X	Fitting, Quick Disconnect, Female
8	T412003	2X	Dust Cap, 3/4 Fitting
9	T400510	1X	Union, 10MB - 04 MJ
10	T401225	1X	Elbow, 04F3 - 04M3 X 90
11	T400110	1X	Union, 04FP - 04M#
12	T400180	1X	Union, 10MB - 12 M3
13	T401355	1X	Elbow, 12FJ - 12MP X 90
14	T412000	1X	Fitting, Quick Disconnect, Male
15	T400510	1X	Fitting, Union, 10 MB - MJ
16	T401230	1X	Fitting, Elbow, 04 MJ X 90

#	NUMBER	QTY.	HOSE ASSEMBLY
1	M500071	1X	Valve to Pressure Guage
2	M500072	1X	Hose Assembly
3	M500073	1X	Hose Assembly
4	M500074	2X	Hose Assembly
5	M500075	1X	Hose Assembly

TOP HEAD COMPONENTS
M-5000

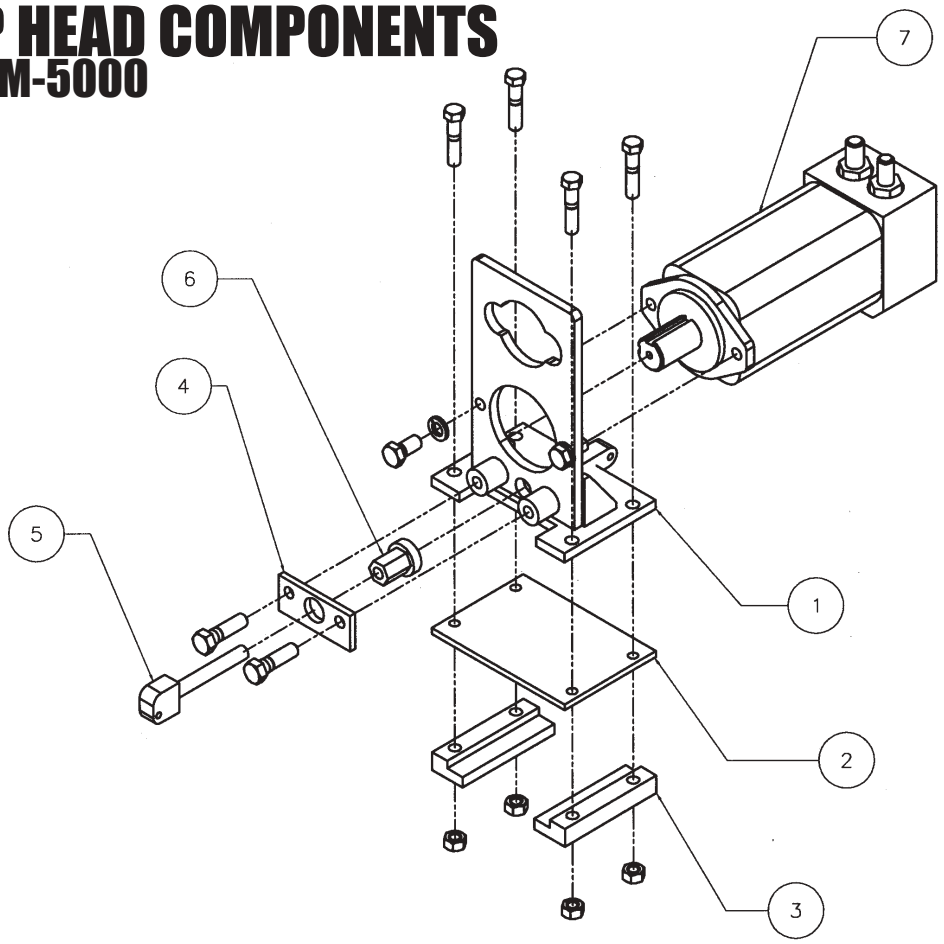

TOP HEAD COMPONENTS
M-5000

ITEM #	QTY.	NUMBER	DESCRIPTION
1	1	M500001	Top Head Mount
	4	U000800	Screw, HC .438-14 X 2.00"
	4	U100100	Nut, Hex .438-14
2	1	M500069	Slide Plate
3	2	M500090	Clasp
4	1	M500044	Clevis Mount Plate
	2	U000860	Screw, HC .500-13 X 1.50
5	1	M500048	Clevis
6	1	M500047	Hex Tensioner Coupling
7	1	T200100	Hydraulic Motor
	2	U070035	Screw, CB .500-13 X 2.250
	2	U210100	Washer, Lock .500
	2	U100120	Nut, Hex. .500-13
	1	U410093	Key, .313 X 1.250

WATER SWIVEL COMPONENTS - WET BORING
M-5000

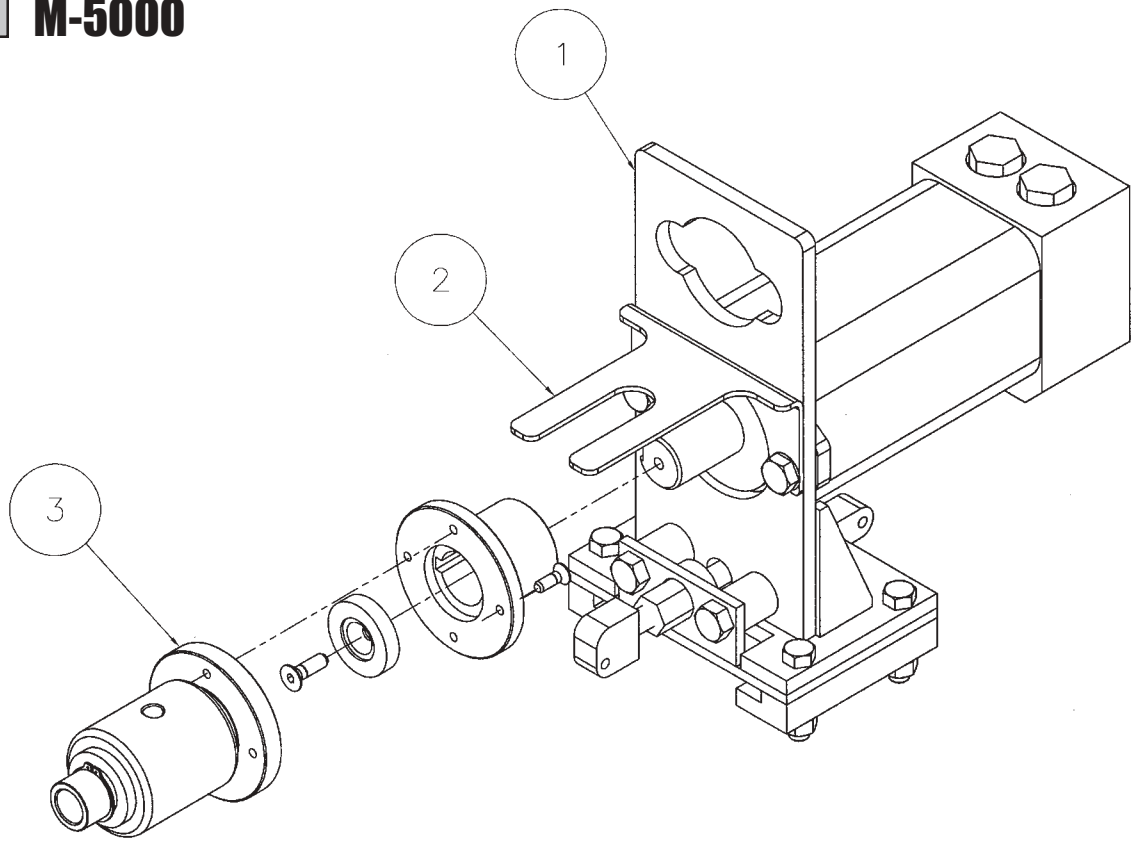

WATER SWIVEL COMPONENTS - WET BORING -
M-5000

ITEM #	QTY.	NUMBER	DESCRIPTION
1	1		Top Head Assembly
2	1	M500111	Swivel Restraint Clip
3	1	M500100	Water Swivel Complete
	1	U030100	Screw, SFH .375-16X1.000
	4	U010800	Screw, SFH .250-20X.750
	1	8080226	Seal Kit

WARRANTY
RETURN GOODS POLICY

LIMITED WARRANTY

The Manufacturer warrants its products to be free from defects in material and workmanship for a period of twelve months from the date of shipment from the factory. Hole Hammer pistons, bodies, and nose pieces are warranted to be free from defects in material and workmanship for a period of three years from the date of shipment from the factory. The Manufacturer shall not be responsible for any damage resulting to or caused by its products by reason of installation, improper storage, unauthorized service, alteration of the products, neglect or abuse, or use of the product in a manner inconsistent with its design. This warranty does not extend to any component parts not manufactured by Manufacturer; however, Manufacturer's warranty herein shall not limit any warranties made by manufacturers of component parts which extend to Buyer.

Claims for defects in material and workmanship shall be made in writing to Manufacturer within ten days of discovery of defect. Manufacturer may either send a service representative or have the product returned to its factory at Buyer's expense for inspection. Upon notification of defect, Manufacturer will issue a return goods authorization number to Buyer. The return goods authorization number must accompany the product returned. If judged by the Manufacturer to be defective in material or workmanship, the product will be replaced or repaired at the option of the manufacturer, free from all charges except authorized transportation. Buyer shall be responsible for all maintenance services consisting of lubrication and cleaning of equipment, replacing expandable parts, making minor adjustments and performing operating checks, all in accordance with procedures outlined in Manufacturer's maintenance literature.

THE FOREGOING WARRANTY IS IN LIEU OF ALL OTHER WARRANTIES AND NO REPRESENTATIONS, GUARANTEES, OR WARRANTIES, EXPRESS OR IMPLIED, (INCLUDING BUT NOT LIMITED TO , A WARRANTY OF MERCHANTABILITY OR FITNESS FOR A PARTICULAR PURPOSE), ARE MADE BY THE MANUFACTURER IN CONNECTION WITH THE MANUFACTURE OR SALE OF ITS PRODUCTS. NO EMPLOYEE, DISTRIBUTOR OR REPRESENTATIVE IS AUTHORIZED TO CHANGE THIS WARRANTY IN ANY WAY OR GRANT ANY OTHER WARRANTY ON BEHALF OF MANUFACTURER. THE REMEDIES OF BUYER SET FORTH HEREIN ARE EXCLUSIVE AND ARE IN LIEU OF ALL OTHER REMEDIES. THE LIABILITY OF MANUFACTURER WHETHER IN CONTRACT, TORT, UNDER ANY WARRANTY, OR OTHERWISE SHALL NOT EXTEND BEYOND ITS OBLIGATION TO REPAIR OR REPLACE, AT ITS OPTION ANY PRODUCT OR PART FOUND BY MANUFACTURER TO BE DEFECTIVE IN MATERIAL OR WORKMANSHIP. MANUFACTURER SHALL NOT BE LIABLE FOR COST OF INSTALLATION AND/OR REMOVAL OR BE RESPONSIBLE FOR DIRECT, INDIRECT, SPECIAL OR CONSEQUENTIAL DAMAGES OF ANY NATURE.

FOR SERVICE OR ASSISTANCE, SEE THE AUTHORIZED McLAUGHLIN DEALER IN YOUR AREA.

GENERAL RETURNS OF MERCHANDISE

1. All material returned to McLaughlin Mfg. Company must have a return authorization number. This number can be obtained by calling the dealer from whom the material was originally purchased.
2. All returned material must be shipped PREPAID.
3. Material without a material authorization number or returned collect will be refused at McLaughlin's dock.
4. All material ordered incorrectly or new material returned for no valid reason will be subject to a 20% restocking charge.
5. In the case of warranty claims, a letter explaining the problem or requesting repair must accompany the material.
6. On warranty consideration, all material shipped by McLaughlin will be invoiced until the defective material is returned for inspection. After inspection, credit will be issued for all parts deemed defective.
7. All return authorization numbers expire 30 days after issue. After this time, warranty claims and material returns are void, and merchandise must be paid in full.
8. McLaughlin must be notified and authorize all warranty work performed by dealer or other service personnel. This authorization must be obtained PRIOR to any work being performed for proper warranty consideration. Credit will not be issued for unauthorized service work performed.