2006 Perimeter Road. Greenville, SC 29605
Toll Free: 800/435-9340 – Phone: 864/277-5870
Fax: 864/235-9661 – Website address: www.mclaughlinunderground
Email address: mmole@mightymole.com

PARTS MANUAL

VX50-500 BOOM
E850515

SERIAL NUMBER – 0411161893 TO 0121172374

5/26/2016

2016 by McLaughlin Group, Inc.
All rights reserved. No part of this manual may be reproduced in any form, or by any means without prior written permission of McLaughlin Group, Inc.

Table of Contents

DECAL LAYOUT 7

TRAILER 16

TRAILER ASSEMBLY..... 18

ELECTRICAL ASSEMBLY..... 20

FUEL TANK ASSEMBLY..... 22

HYDRAULIC PUMP ASSEMBLY 24

BASE MANIFOLD ASSEMBLY 27

HYDRAULIC ARM ASSEMBLY 29

SPOIL TANK/DOOR ASSEMBLY..... 31

FILTRATION ASSEMBLY..... 33

TANK SKID ASSEMBLY 35

POWERPACK SKID ASSEMBLY 37

CONTROL BOX ASSEMBLY..... 39

ENCLOSURE ASSEMBLY..... 41

ENGINE ASSEMBLY..... 43

BLOWER ASSEMBLY 45

WATER PUMP ASSEMBLY..... 47

WATER TANK 50GAL ASSEMBLY..... 49

WATER TANK 125GAL ASSEMBLY..... 51

WATER REEL/ANTIFREEZE ASSEMBLY..... 53

VAC TOOLS..... 56

SUCTION TOOL ASSEMBLY..... 57

ROTARY LANCE ASSEMBLY..... 59

WASH WAND ASSEMBLY..... 61

HOT BOX ASSEMBLY..... 63

ARROWBOARD ASSEMBLY..... 65

BOOM ASSEMBLY 67

ROOT BLOWER MANUAL 82

SYSTEM OPERATIONS SPECIFICATIONS

PART	PART #	FIRST 50 HOURS	EVERY 250 HOURS	EVERY 400 HOURS	EVERY 500 HOURS	EVERY 3000 HOURS	EVERY 1 YEAR
ENGINE OIL	15W40 CJ-4	✓Daily		X			
ENGINE COOLANT	50/50 mixture of PROPYLENE GLYCOL AND WATER that meets ASTM D6210 specifications	✓Daily					
OIL FILTER (KUBOTA)	T700077	X		X			
FUEL FILTER (KUBOTA)	8090544-07				X		
AIR FILTER (KUBOTA)	8090544-12		X				X
FUEL-WATER SEPARATOR FILTER	8090941-01	X					
HYDRAULIC OIL	INDUSTRIAL TYPE HYDRAULIC FLUID	✓Daily					
BLOWER OIL	INDUSTRIAL TYPE, HEAVY DUTY, NON-DETERGENT MOTOR OIL	✓Daily, X	X				
WATER PUMP OIL	GENERAL PUMP SERIES 100 OIL or SAE30, NON-DETERGENT, MOTOR OIL	✓Daily					
DIESEL PARTICULATE FILTER						X	

HYDRAULIC TEMPERTURE RANGE	0-120°F (-18°-40°C) SAE 10 GRADE HYDRAULIC OIL or DEXTRON II ATF 32-175°F (0-80°C) SAE 20 GRADE HYDRAULIC OIL 3QTS (2.8L)

BLOWER TEMPERTURE RANGE	30°F (-1°C) AND UNDER	SAE 20
	30-90°F (-1-32°C)	SAE 30
	90°F (32°C) AND ABOVE	SAE 40

****WATER PUMP – (Remove fill cap and fill crankcase to dot on oil gauge window.)**

****Refer to Component Manual specific Component Specifications.**

GREASE GUN LUBE POINTS

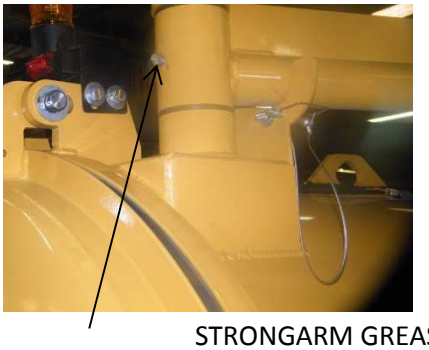

STRONGARM GREASE POINT

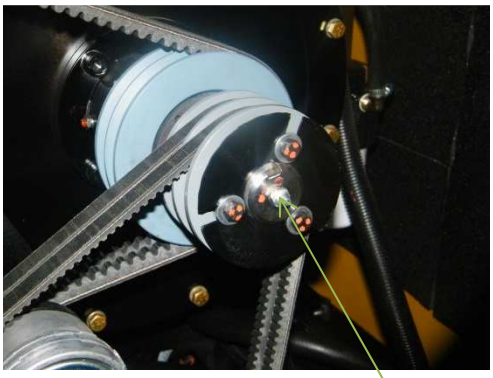

ENGINE GREASE POINT

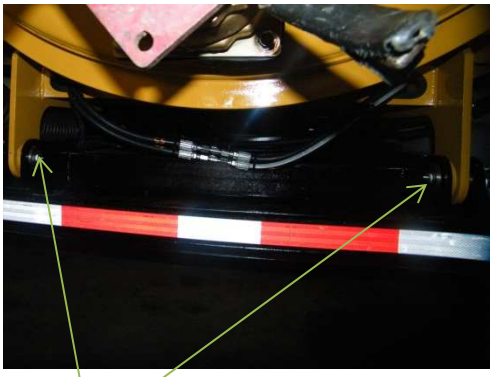

TANK PIVOT TUBE GREASE POINT

4-WAY VALVE GREASE POINT

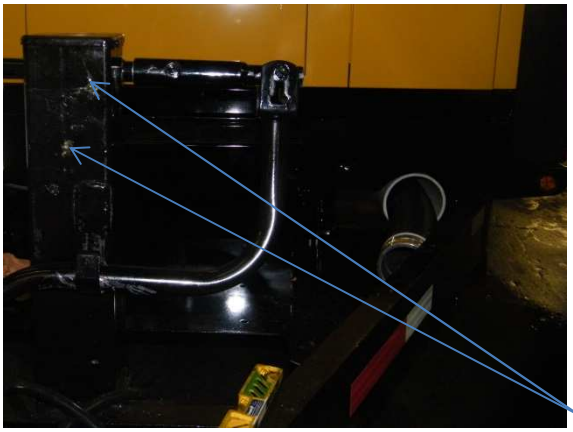

TRAILER JACK GREASE POINT

J200445

J200435

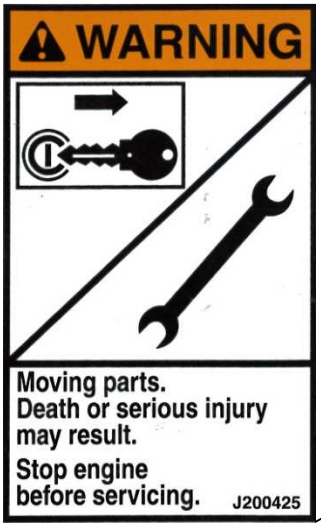

J20045

J200210

J200445

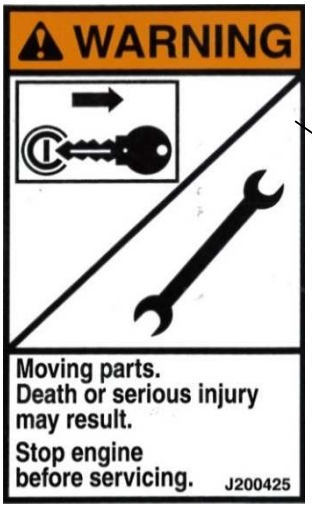

J200425

8049882

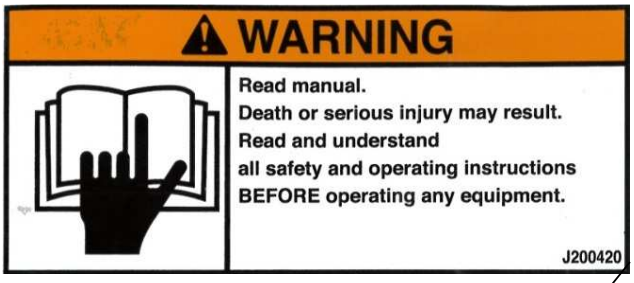

J200420

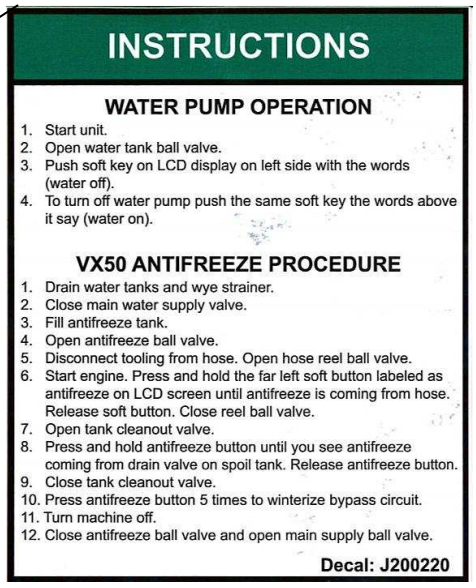

J200220

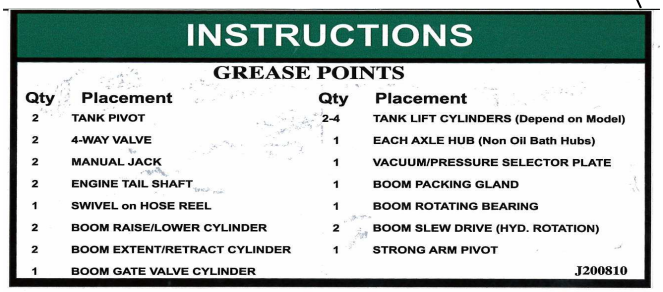

J200810

J200423

J200450

J200458

J200455

J200423

J200415

J200410

J200473

J200440

J200532

DANGER
CRUSH HAZARD.

DANGER
CRUSH HAZARD.
• Moving clamp can crush and cut.
• DO NOT operate with access cover removed.
J200411

DANGER
CRUSH HAZARD.

DANGER
ELECTROCUTION HAZARD
Death or serious injury will result if boom approaches or touches overhead electrical power lines.
Keep boom away from overhead utilities.
Use caution when operating boom.
J200403

DANGER

VX50-500 BOOM COMPLETE

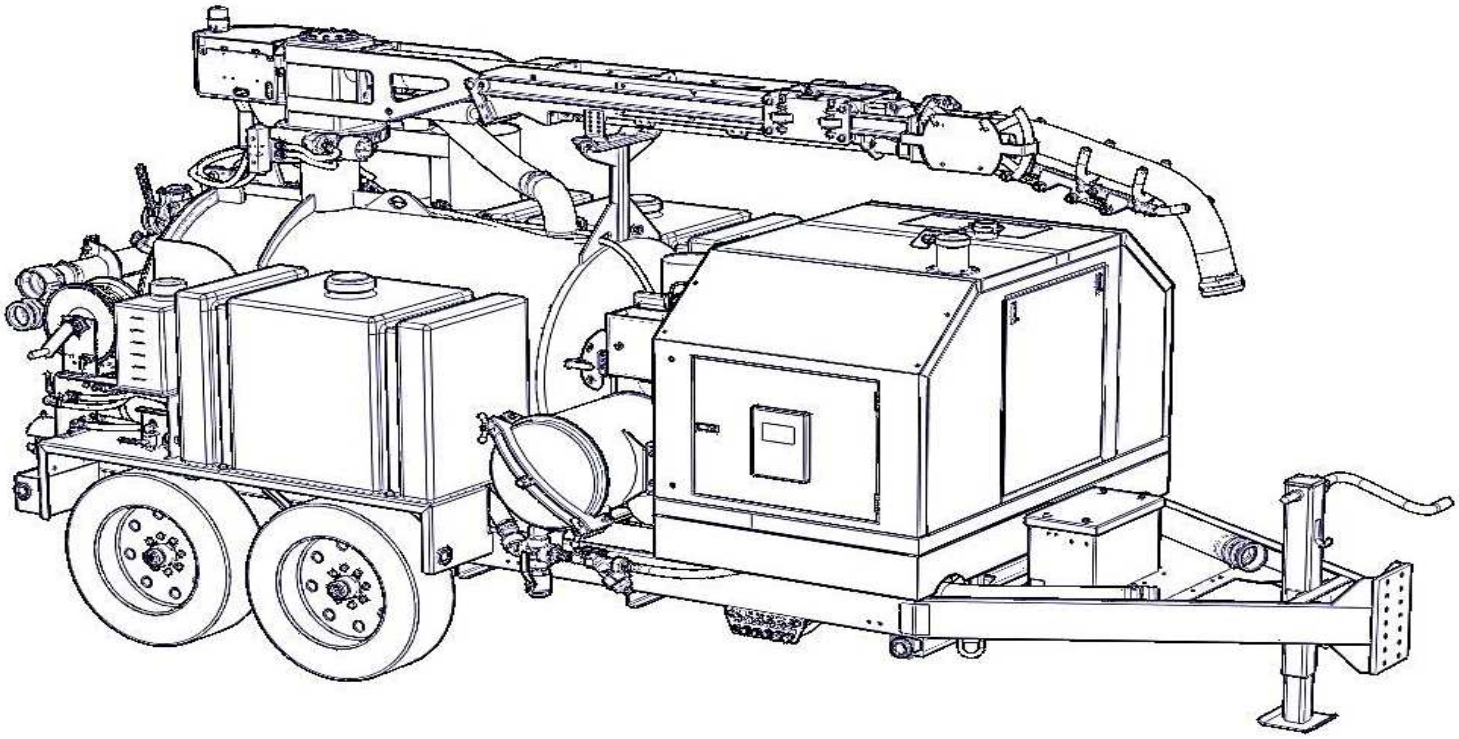

PAGE LEFT BLANK

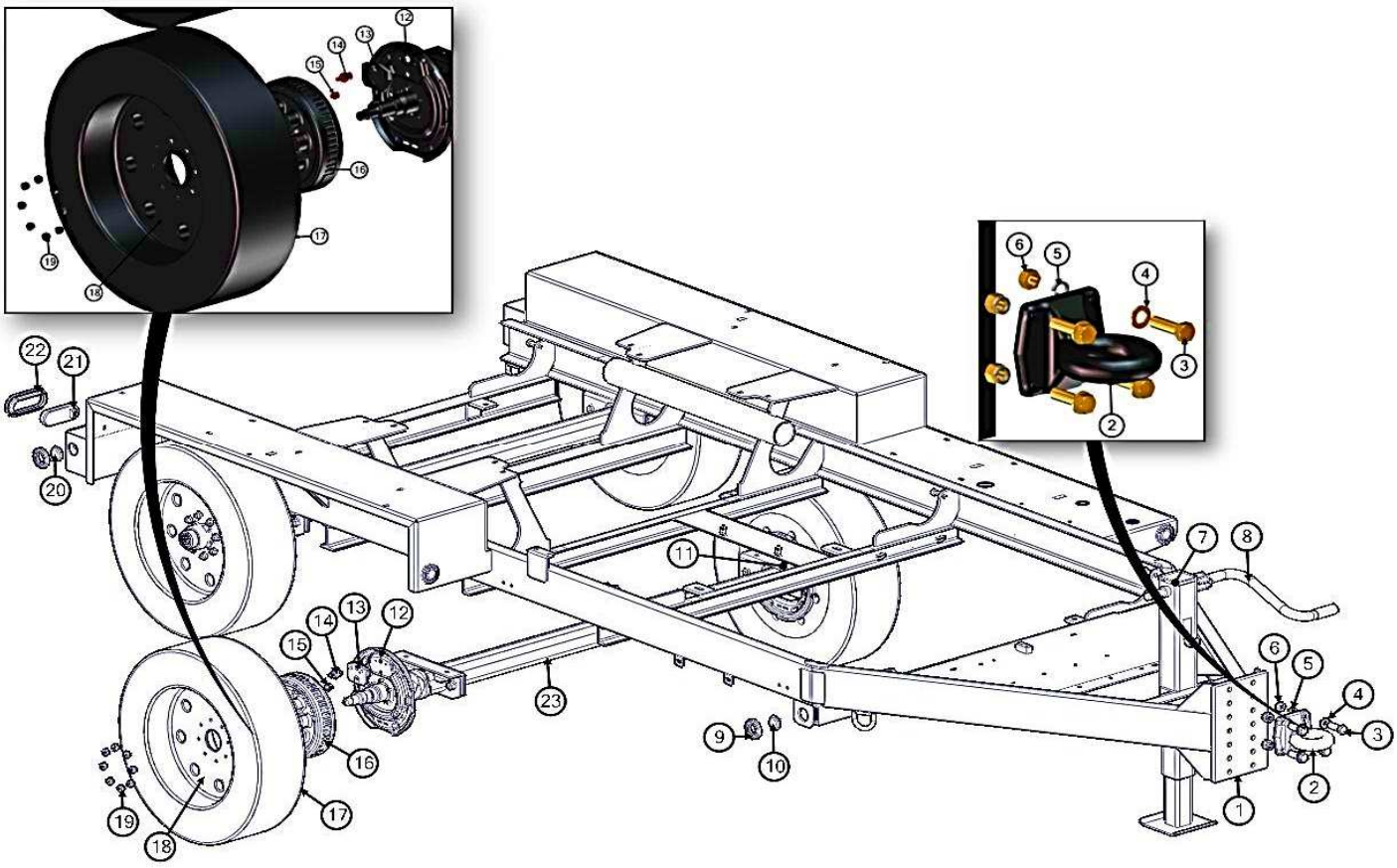
12
13
14
15
16
17
18
19
22
21
20
6
5
4
3
2
11
7
8
23
9
10
1

BOM ID	Qty	Name	
1	1	8093011	TRAILER, VX50-500 BOOM
2	1	8045366	PINTLE EYE
3	4	U001420	SCREW, HC .750-10 X 2.50 ZP G5
4	4	U200160	WASHER, FLAT .750 ZP
5	4	U210160	WASHER, LOCK .750 ZP
6	4	U100200	NUT,HEX .750-10 ZP G5
7	1	8043548	JACK, MANUAL
8	1	8043984	JACK, HANDLE
9	8	8091469	GROMMET, LIGHT 2in RUBBER
10	4	8091468	LIGHT,TRAILER 2" LED AMBER
11	1	8046307	LH BRAKE ASSEMBLY
12	1	8046308	RH BRAKE ASSEMBLY
13	4	8046305	SHOE KIT
14	4	8046306	ADJUSTER KIT
15	4	8046304	MAGNET KIT
16	4	8047027	HUB
17	4	8045370	TIRE,ST215 X 75 R17.5
18	4	8045369	WHEEL, R17.5X6.75
19	32	8043987	LUG NUT
20	4	8091370	LIGHT,2" LED RED MARKER
21	2	8091470	LIGHT, TRAILER OVAL LED_RED
22	2	8091471	GROMMET,LIGHT OVAL LED
23	2	8045710	AXLE

TRAILER ASSEMBLY

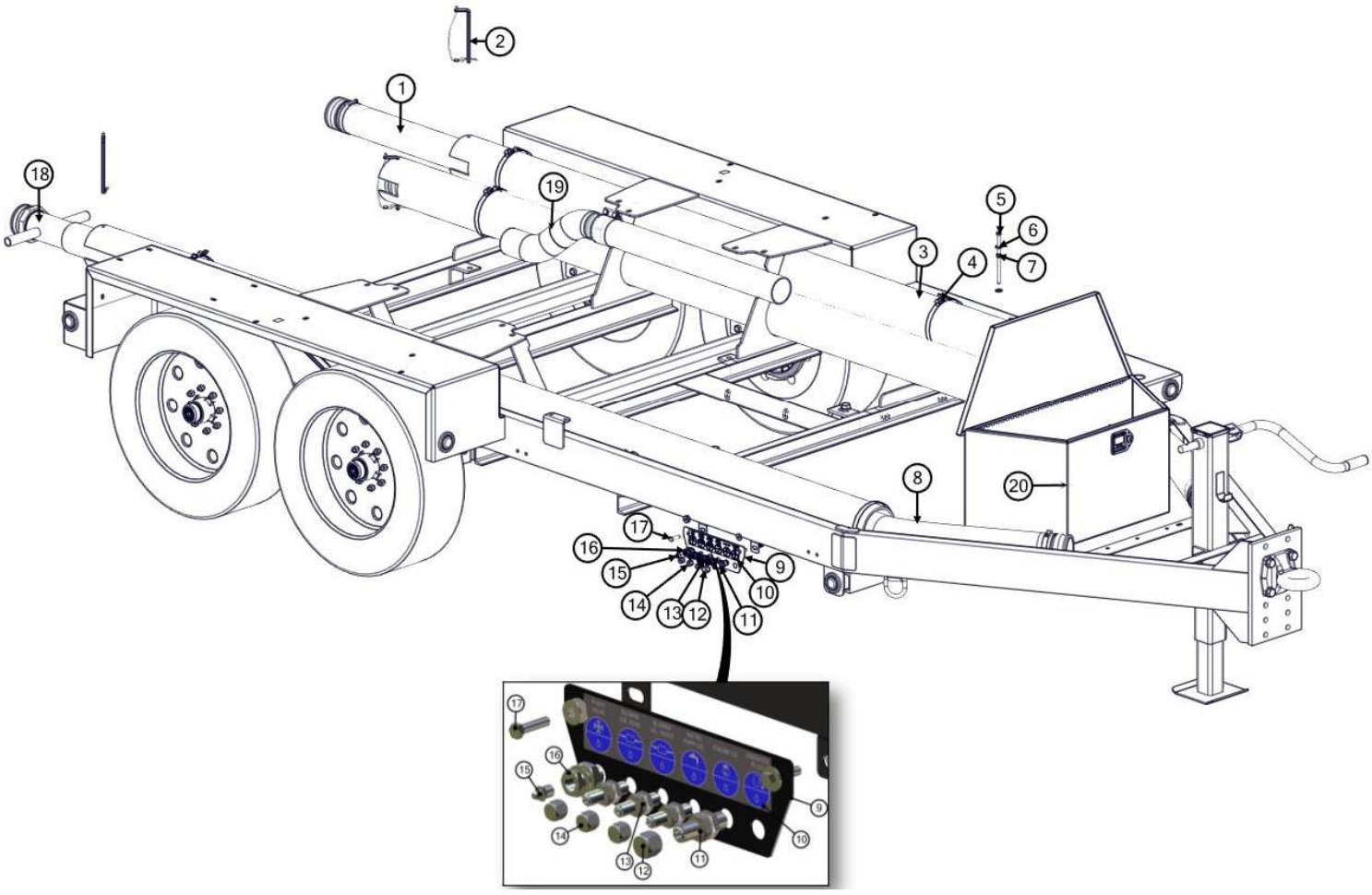

TRAILER ASSEMBLY

BOM ID	Qty	Name	
1	1	8090726	HOSE VAC KANAFLEX ASSY 120"LG
2	4	8092776	ROD RETAINING ASSEMBLY
3	1	8092783	PIPE,6"PVC X 128"
4	7	8093153	CLAMP, HOSE T-BOLT 750
5	1	U000626	SCREW, HC .375-16 X 7.50"
6	6	U200060	WASHER, FLAT .375 ZP
7	1	U120110	NUT, LOCK .375-16 NY ZP
8	2	8092784	HOSE VAC KANAFLEX ASSY 180"LG
9	1	8092697	PLATE, REMOTE DRAIN
10	1	J200247	DECAL, REMOTE DRAIN
11	1	T400387	BULKHEAD 8MJ_8MJ
12	1	T405205	CAP, 1/2"FJ HEX HEAD
13	3	T400391	BULKHEAD 6MJ_6MJ
14	3	T405203	CAP, 3/8"FJ HEX HEAD
15	1	T500100	FITTING, GREASE 1/4" NPT STR
16	1	T400383	BULKHEAD, 1/4FP-1/4FP
17	2	U000460	SCREW, HC .375-16 X 1.50 ZP G5
18	1	8040983	SUCTION TOOL 4"
19	1	8092498	WELDMENT,TUBE AG HOSE 4"ID-OD
20	1	8093727	BOX, TRAILER TONGUE

ELECTRICAL ASSEMBLY

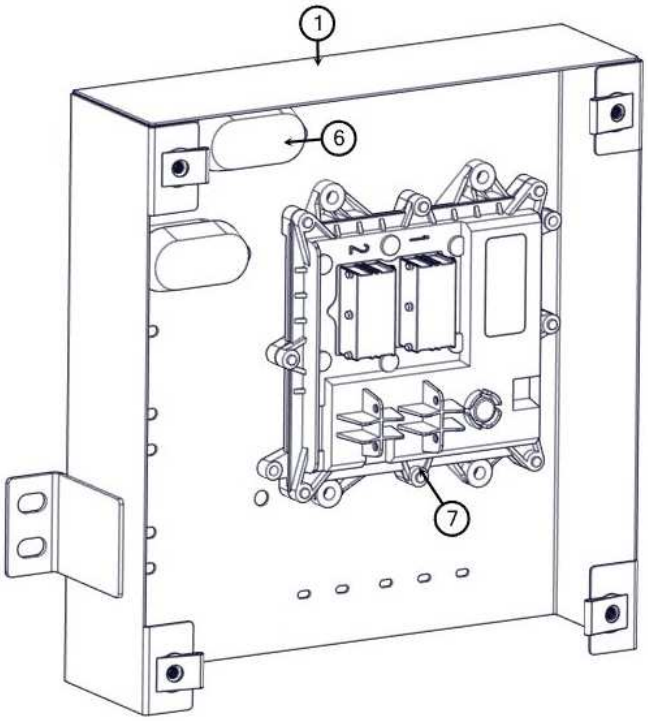

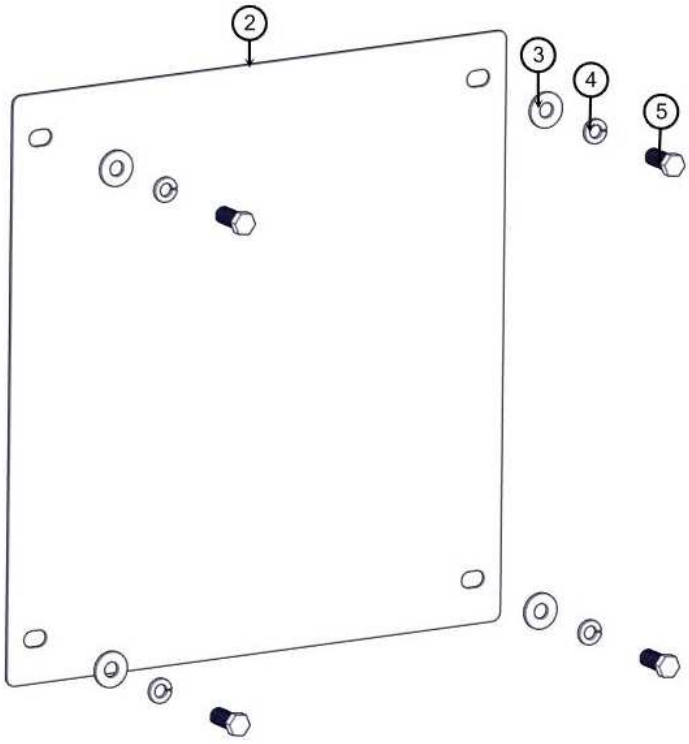

ELECTRICAL ASSEMBLY

BOM ID	Qty	Name
1	1	8093661 WELDMENT, ELECTRONIC BOX
2	1	8093655 PLATE, COVER ELECTRIC BOX
3	4	U200060 WASHER, FLAT .375 ZP
4	4	U210060 WASHER, LOCK .375 ZP
5	4	U000420 SCREW, HC .375-16 X 1.00 ZP G5
6	2	8043800 FUSE HOLDER AMG
7	1	8090544-21 ENGINE ECM MODULE

FUEL TANK ASSEMBLY

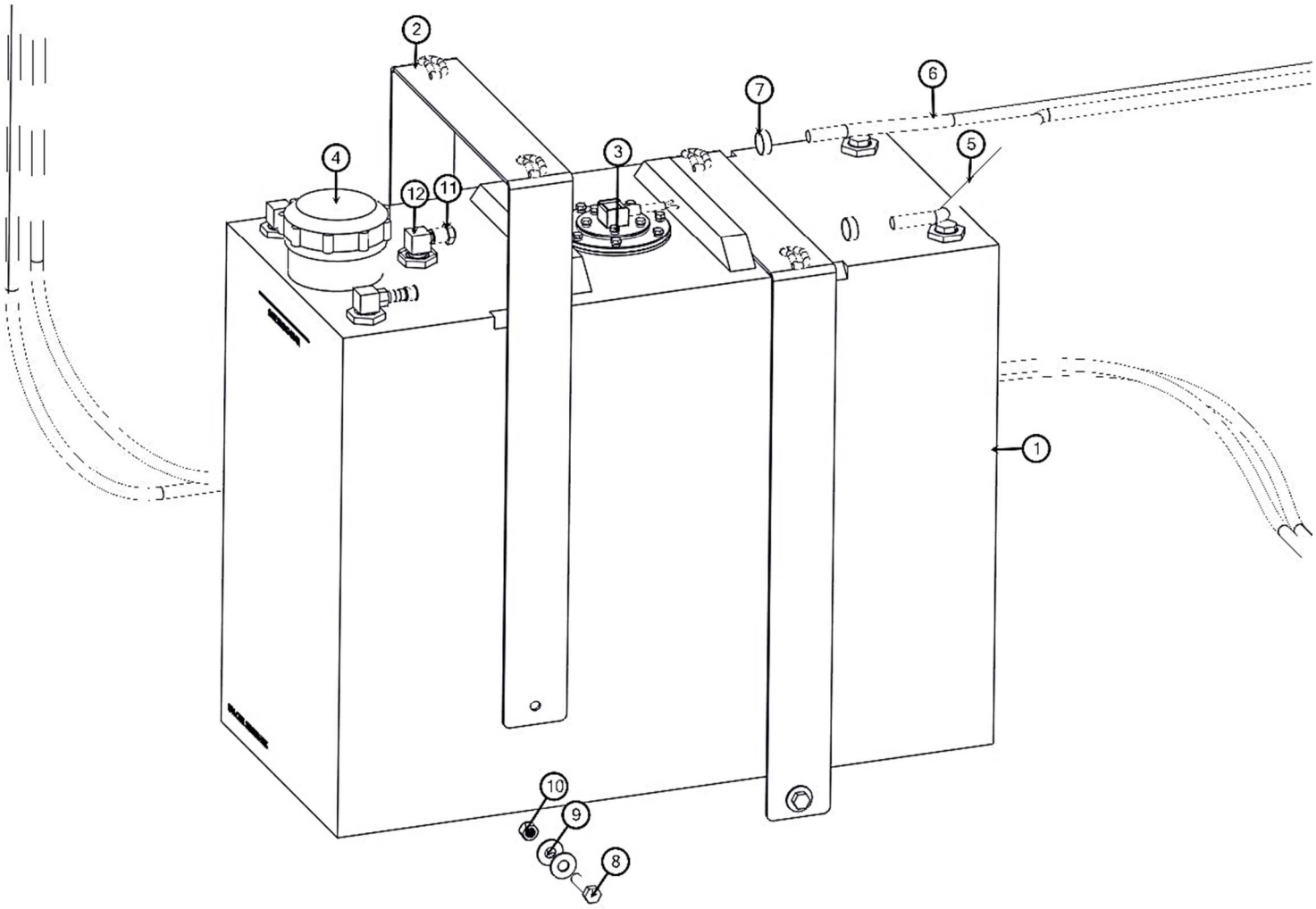

FUEL TANK ASSEMBLY

BOM ID	Qty	Name
1	1	8092841 TANK, FUEL 22 GAL DIESEL
2	2	8092577 WELDMENT, FUEL TANK STRAP
3	1	8092841-03 SENDING UNIT, FUEL TANK 22 GAL
4	1	8092841-01 CAP, FUEL TANK
5	1	T300457-155.50 HOSE, FUEL 3/8 X 155 1/2"
6	1	T300457-153.00 HOSE, FUEL 3/8 X 153"
7	4	U800030 CLAMP, HOSE 5/16"-7/8"
8	2	U000460 SCREW, HC .375-16 X 1.50 ZP G5
9	6	U200060 WASHER, FLAT .375 ZP
10	4	U120110 NUT, LOCK .375-16 NY ZP
11	1	8093160 BREATHER VENT with SPLASH GUARD
12	3	8090235 FUEL PICKUP PLASTIC 3/8"NPT SC

KEY, FUEL CAP - 8092841-02

HYDRAULIC PUMP (BOOM)

809

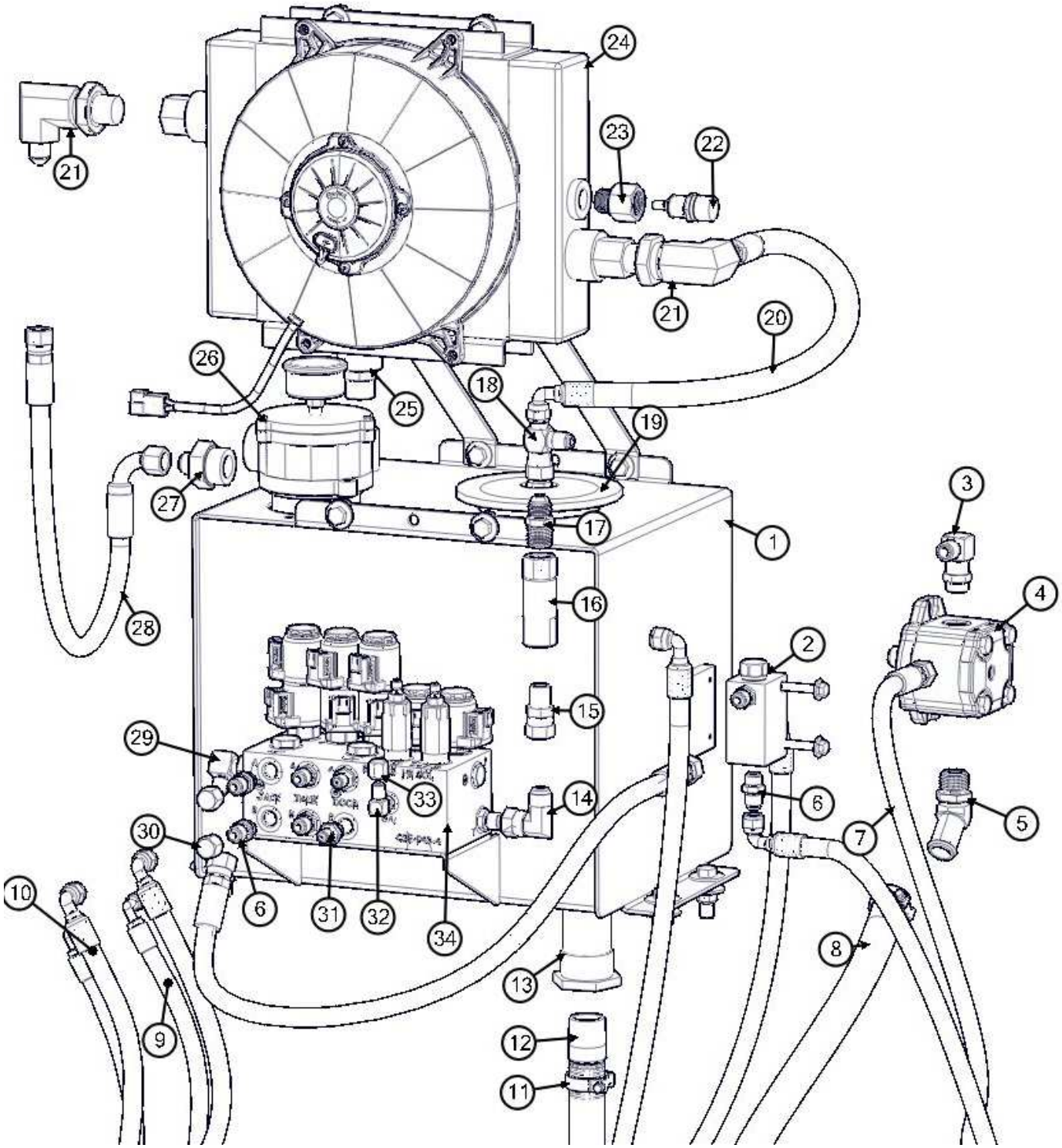

HYDRAULIC PUMP (BOOM)

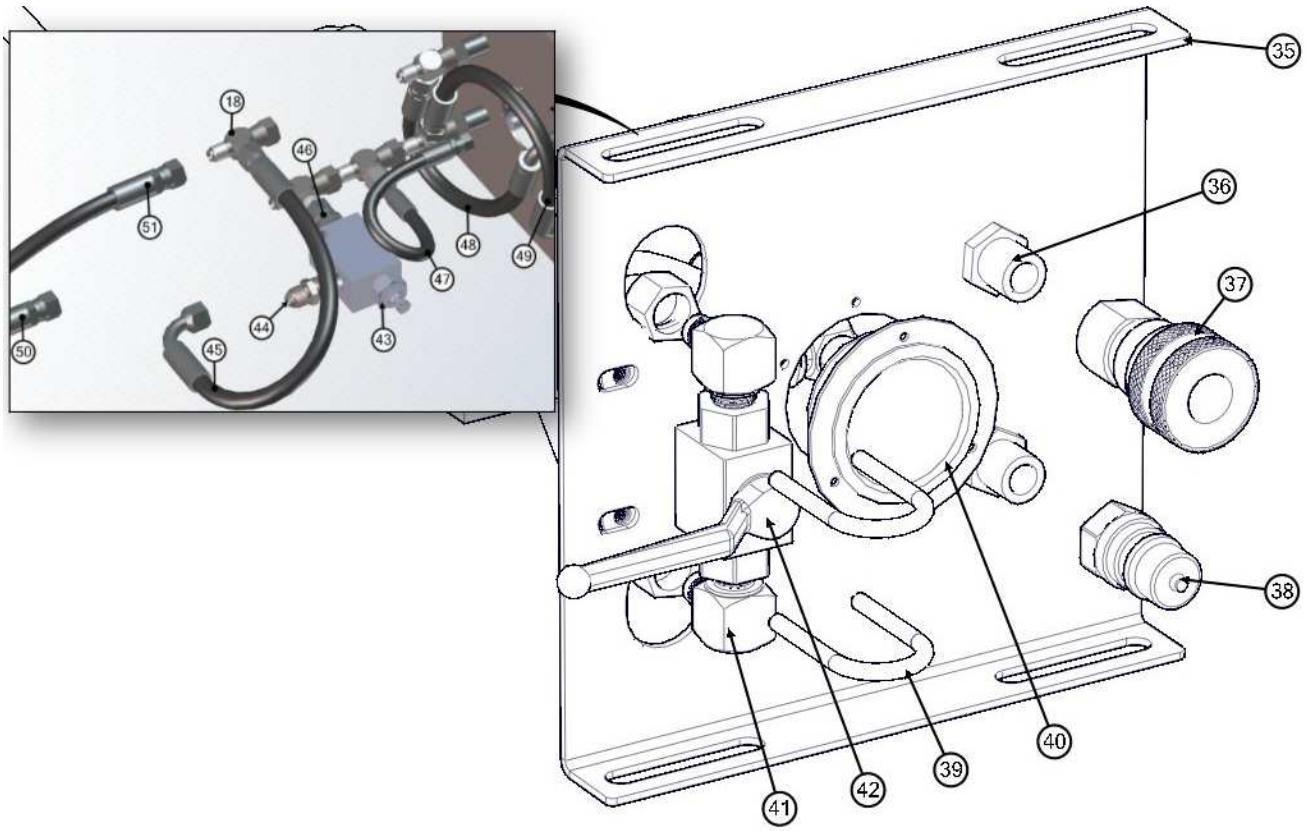

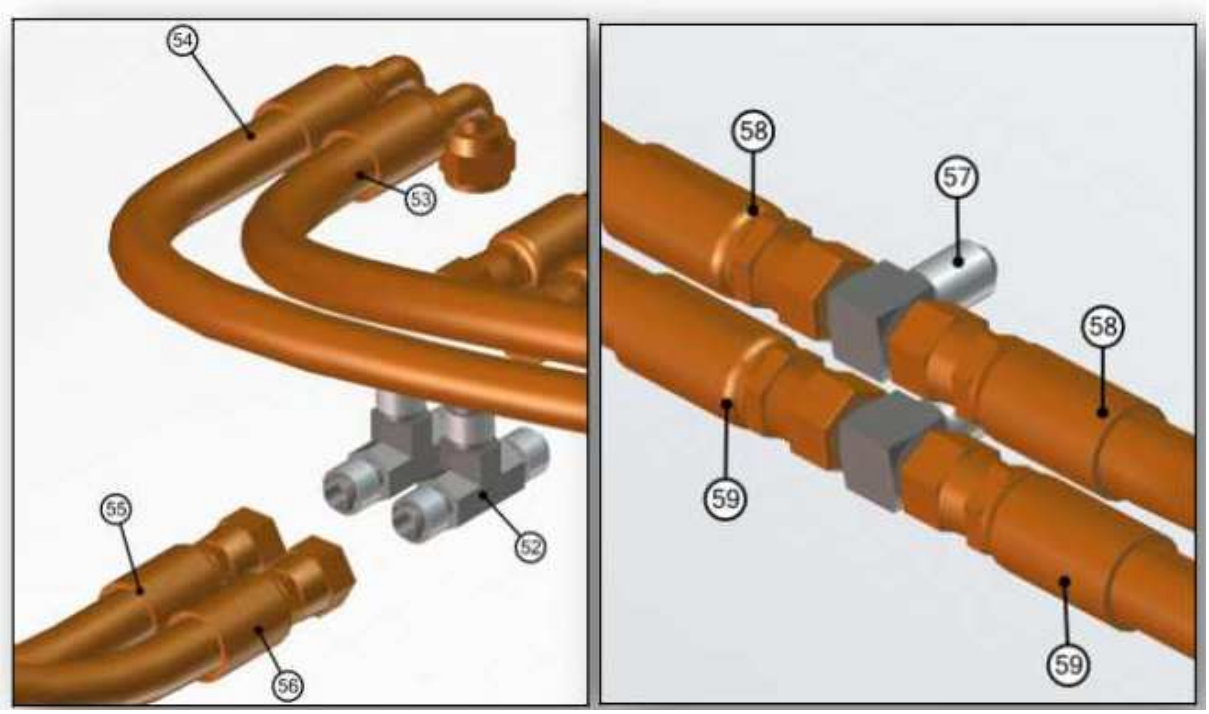

HYDRAULIC PUMP ASSEMBLY

BOM ID	Qty	Description
1	1	8092891 WELDMENT, TANK HYD 9 GAL
2	1	8093964 VALVE, PRIORITY FLOW 3GPM
3	1	T401300 ELBOW,90 10MB(ADJ)-8MJ
4	1	8092866 PUMP,GEAR "A" MOUNT 10GPM
5	1	8043964 ELBOW,45 1"HB - 3/4"MB
6	8	T400037 UNION, 6MB-6MJ
7	1	8049284 HOSE ASSY VAC 6-65" ST-90
8	1	8044011-059.00 HOSE, SUCTION 1" X 59"LG
11	2	8044011 CLAMP, HOSE T-BOLT 150
12	1	8043963 UNION, 1"MP-1" HOSE BARB
13	1	8011058 STRAINER, SUCTION 1 1/2"OD X 1"ID
14	1	T401228 ELBOW 90 6MJ-6FJ
15	1	T400813 UNION, 6MP-6FJ
16	1	T000312 VALVE, CHECK 1/2"FNPT
17	1	T400040 UNION, 8MP-8MJ
18	6	T402155 TEE, 8FJ-8MJ-8MJ
19	1	8047330-15 CLEANOUT COVER
20	1	8092972 HOSE ASSY VAC 6-21" ST-90
21	2	T401320 ELBOW, 90 12MB(ADJ)-8MJ
22	1	8047920 SWITCH, TEMP OIL AUX HYD 165F
23	1	T421405 UNION 8MB-8FP
24	1	CM00041 COOLER, HYD W/FAN
25	1	8047330-14 CAP, PLASTIC GREY
26	1	8047456 FILTER, HYD OIL AUX CROSS2

BOM ID	Qty	Description
27	1	T400240 REDUCER, 16MB-8MJ
28	1	8092973 HOSE ASSY VAC 6-18"ST-90
29	1	T401250 ELBOW, 90 6MB-6MJ
30	2	T405203 CAP, 3/8" FJIC HEX HEAD
31	2	T400550 REDUCER, 6MB-4MJ
32	1	T401230 ELBOW, 90 4MB-4MJ
33	1	T405200 CAP, 1/4" FJIC HEX HEAD
34	1	8048690-02 MANIFOLD ASSY BOOM LWR (CROSS3)
35	1	8092940 PANEL, AUX HYD CONTROL
36	2	T400396 BULKHEAD, 8MP-8MJ
37	1	8030663 FITTING, QUICK DISC FEMALE 1/2"
38	1	8030662 FITTING, QUICK DISC MALE 1/2"
39	2	U010017 U-BOLT, .250-20
40	1	HM00092 GAUGE, PRESS. 3000PSI PANEL
41	2	T401102 ELBOW, 90 6MP-6MJ
42	1	8031197 VALVE, BALL 1/2" 3000 PSI. MIN
43	1	8041829 VALVE, RELIEF AUX HYD
44	1	T400040 UNION, 8MP-8MJ
45	1	8049005 HOSE ASSY VAC 8-16" ST-ST
46	1	T400814 UNION, 8MP-8FJ
47	1	8042934 HOSE ASSY VAC 4-12" ST-ST
48	1	8049007 HOSE ASSY VAC 8-10" ST-ST
49	1	8049006 HOSE ASSY VAC 8-8" ST-90

BASE MANIFOLD ASSEMBLY

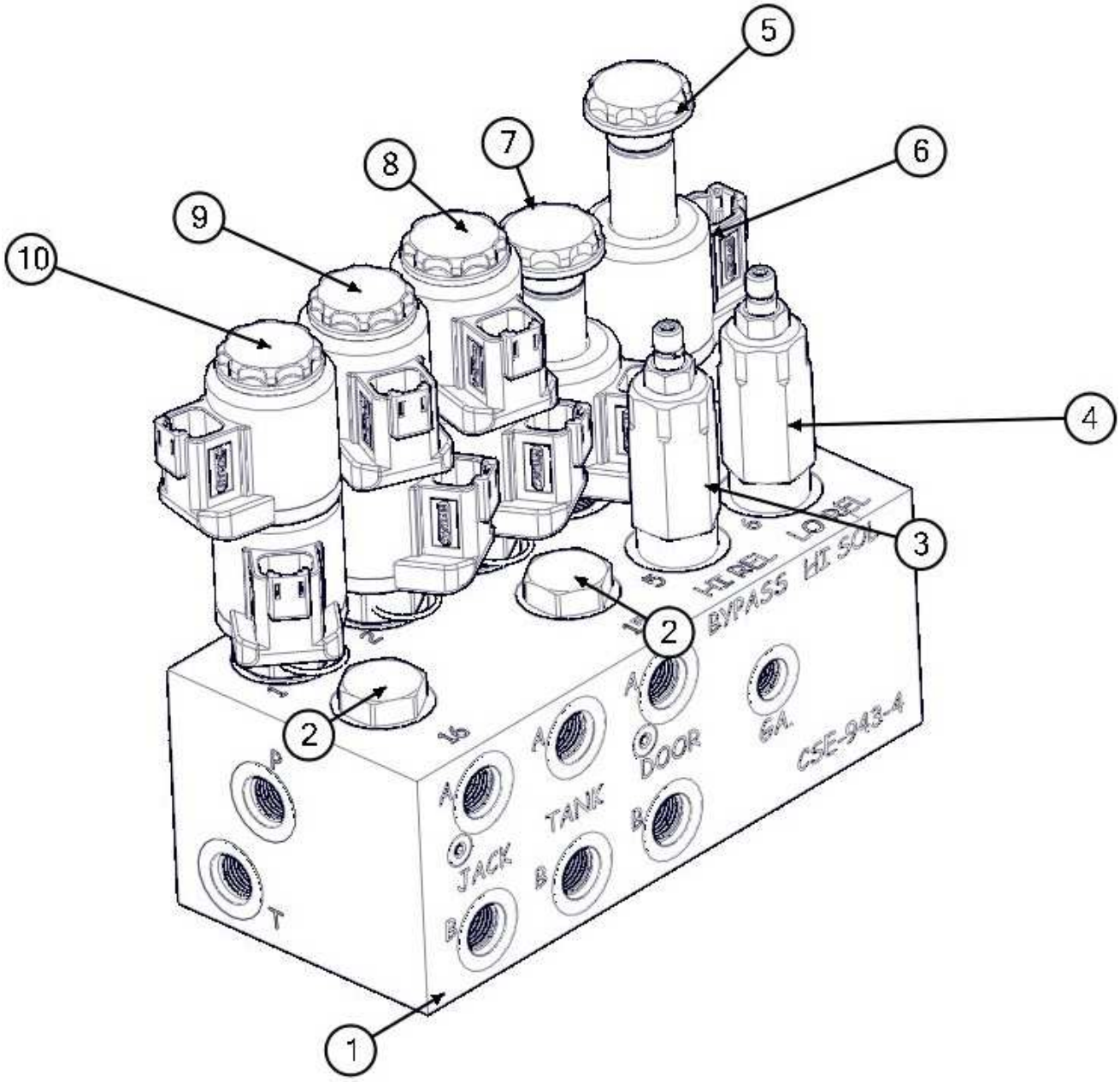

BASE MANIFOLD ASSEMBLY

BOM ID	Qty	Name
1	1	8048690-03 MANIFOLD BLOCK (ONLY)
2	2	8048690-08 VALVE, CARTRIDGE DBL PO CHECK
3	1	8047330-12 VALVE, CARTRIDGE RELIEF HI-PRESSURE
4	1	8047330-13 VALVE, CARTRIDGE RELIEF LOW-PRESSURE
5	1	8047330-08 VALVE, CARTRIDGE 2 POS-N.O.
6	8	8047330-11 COIL, 12V
7	1	8047330-08 VALVE, CARTRIDGE 2 POS-N.O.
8	1	8048690-09 VALVE, CARTRIDGE 3 POS - OPEN CTR
9	1	8047330-09 VALVE, CARTRIDGE 3 POS - BLOCKED CTR
10	1	8048690-09 VALVE, CARTRIDGE 3 POS - OPEN CTR

MACHINES WITH NO HYDRAULIC JACK:

PORT 1 - 8047330-10 PLUG, CAVITY
PORT 16 - 8048690-10 PLUG, SAE

HYDRAULIC ARM ASSEMBLY

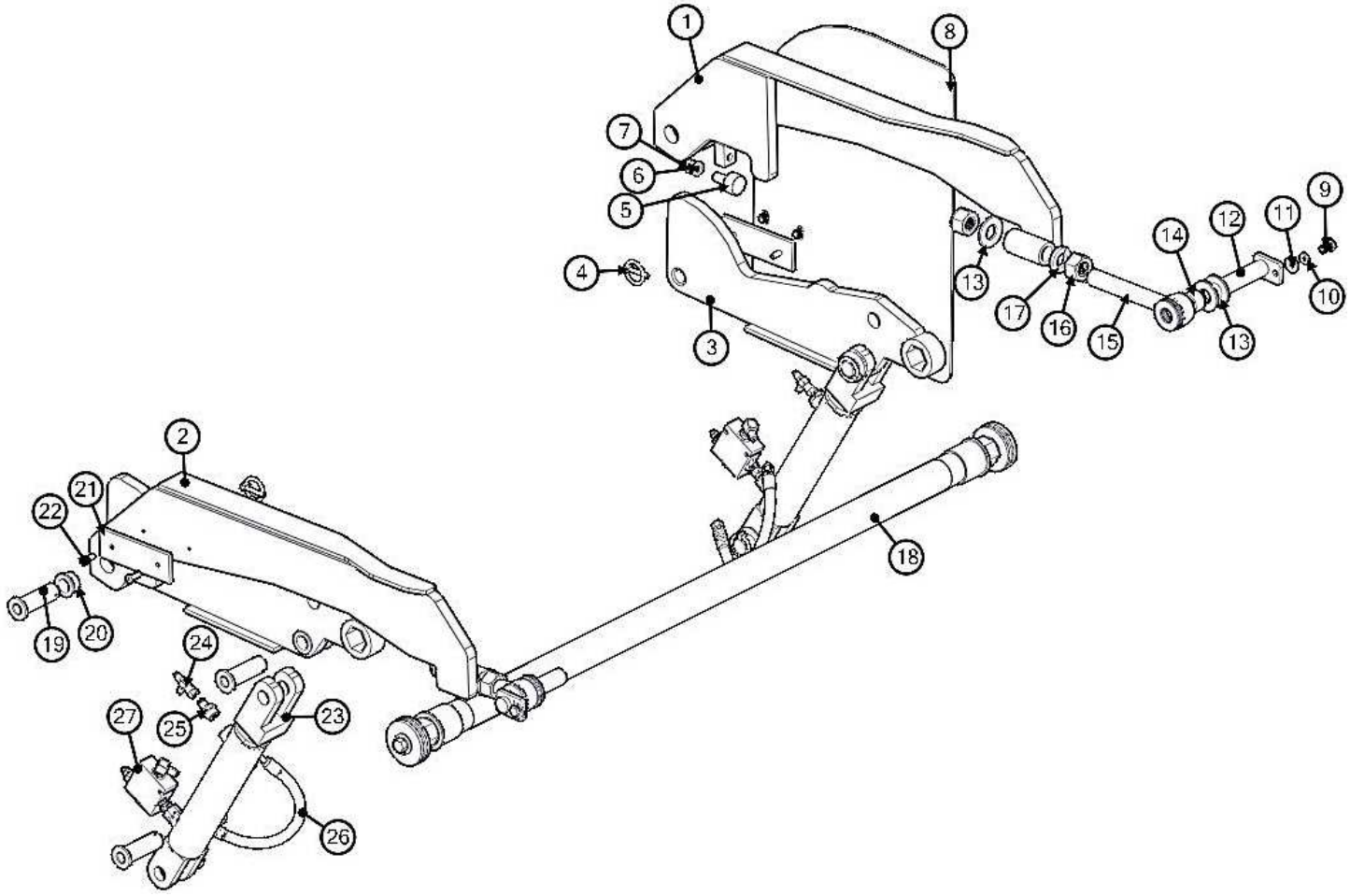

HYDRAULIC ARM ASSEMBLY

BOM ID	Qty	Name	
1	1	8049763	LINKAGE, LONG WELDMENT
2	1	8049765	LINKAGE, LONG WELDMENT
3	2	8049766	LINKAGE, SHORT ARM WELDMENT
4	6	U340050	PIN LINCH 3/16 X 1 9/16 ZP
5	2	W000020	BEARING, CAMROL 1.25"
6	2	U210100	WASHER, LOCK .500 ZP
7	2	U160015	NUT, JAM .500-20
8	1	8049762	GUARD, HYD. ARM
9	2	U000400	SCREW, HC .375-16 X .75 ZP G5
10	2	U210060	WASHER, LOCK .375 ZP
11	2	U200060	WASHER, FLAT .375 ZP
12	2	8043844	CYLINDER PIN FLANGED 1" X 5 1/2"
13	14	U200170	WASHER, FLAT 1.00 ZP
14	2	8041524	BUSHING BRONZE 1.25 X 1.00 X .75 PL
15	2	8043131	ROD END 1"-8 X 7 1/2"
16	2	U100240	NUT, HEX 1.00-8 ZP G2
17	2	U210200	WASHER, LOCK 1.00 ZP
18	1	8090906	LINKAGE CROSS TUBE ASSEMBLY
19	6	8042489	CYLINDER PIN
20	8	8041883	BUSHING BRONZE 1.25 X 1.00 X .63 FL
21	2	8049376	STRIP, PLASTIC 1/4" X 2" X 6"
22	4	U030017	SCREW, SFH .250-20 X 1.00 ZP
23	2	8041327	CYLINDER, HYD. DOOR
24	2	T402010	TEE, 4FJ-4MJ-4MJ
25	2	T400611	REDUCER, 8MB-4MJ
26	2	8044748	HOSE ASSY VAC 4-13" ST-90
27	2	8090248	ASSEMBLY, PO CHECK

SPOIL TANK ASSEMBLY

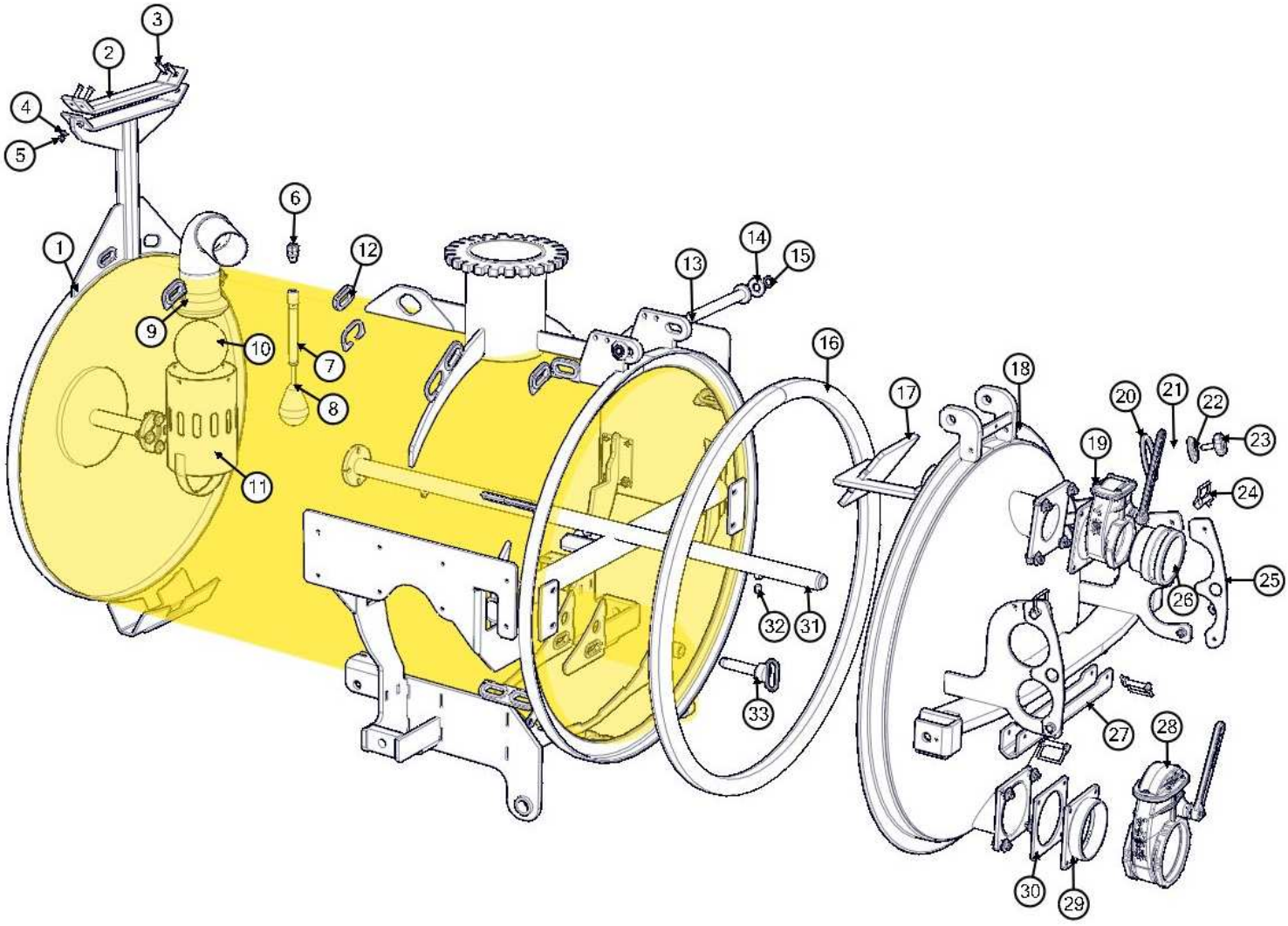

SPOIL TANK ASSEMBLY

BOM ID	Qty	Description
1	1	8092442 TANK, SPOIL 500 BOOM
2	2	8047711 STRIP, RUBBER BOOM FOOT
3	4	U030018 SCREW, SFH .250-20 X 1.50 ZP
4	4	U200020 WASHER, FLAT .250 ZP
5	4	U120000 NUT, LOCK .250-20 NY ZP G2
6	1	X000113 STRAIN RELIEF 1/2"NPT .250-.375
7	1	8040769 TUBE, TANK FULL SWITCH 8"
8	1	8030531 SWITCH, FLUID LEVEL
9	1	8043571 SEAT RUBBER 4" FOR FLOAT BALL
10	1	8043570 BALL, STAINLESS FLOAT 6"
11	1	8043700 WELDMENT, BALL FLOAT SCREEN
12	18	8042812 GROMMET, 2"ID X 3"OD X 1/4"WOG
13	1	8040058 ROD, DOOR HINGE
14	6	U200170 WASHER, FLAT 1.00
15	2	U500020 SNAP RING, EXT 1" SHAFT ZP
16	1	8041765 SEAL, DOOR SQ V250/500 136 BONDED
17	1	8092385 DEFLECTOR BOLT-ON
18	1	8092836 WELDMENT, DOOR 500 BOOM
19	1	8046215 VALVE, 4" GATE BRASS LEVER FLANGE
20	1	8032007 GASKET, 4" FLAT ALUM COUPLER
21	1	8031048 SIGHTGLASS, 5" GLASS ONLY
22	1	8031047 PLATE, SIGHTGLASS
23	1	8031046 SCREW, HANDWHEEL SIGHTGLASS
24	4	8041213 PIN, SAFETY SNAP
25	2	8091327 RETAINER, BOOM TOOLS
26	1	8046445 CAMLOCK, 4" AL FCAM X MNPT
27	1	8091336 BRACE, TANK SAFETY
28	1	8030849 VALVE, 6" GATE BRASS LEVER TYPE
29	1	8046199 GATE VALVE TANK FLANGE 6"
30	1	8046191 GASKET, DOOR INLET/OUTLET
31	1	8043166 WELDMENT, TANK ROD 500 HYD DOOR
32	3	8030369 NOZZLE, TANK CLEANOUT
33	1	8041626 PIN HITCH 1" X 4 1/2"

FILTRATION ASSEMBLY

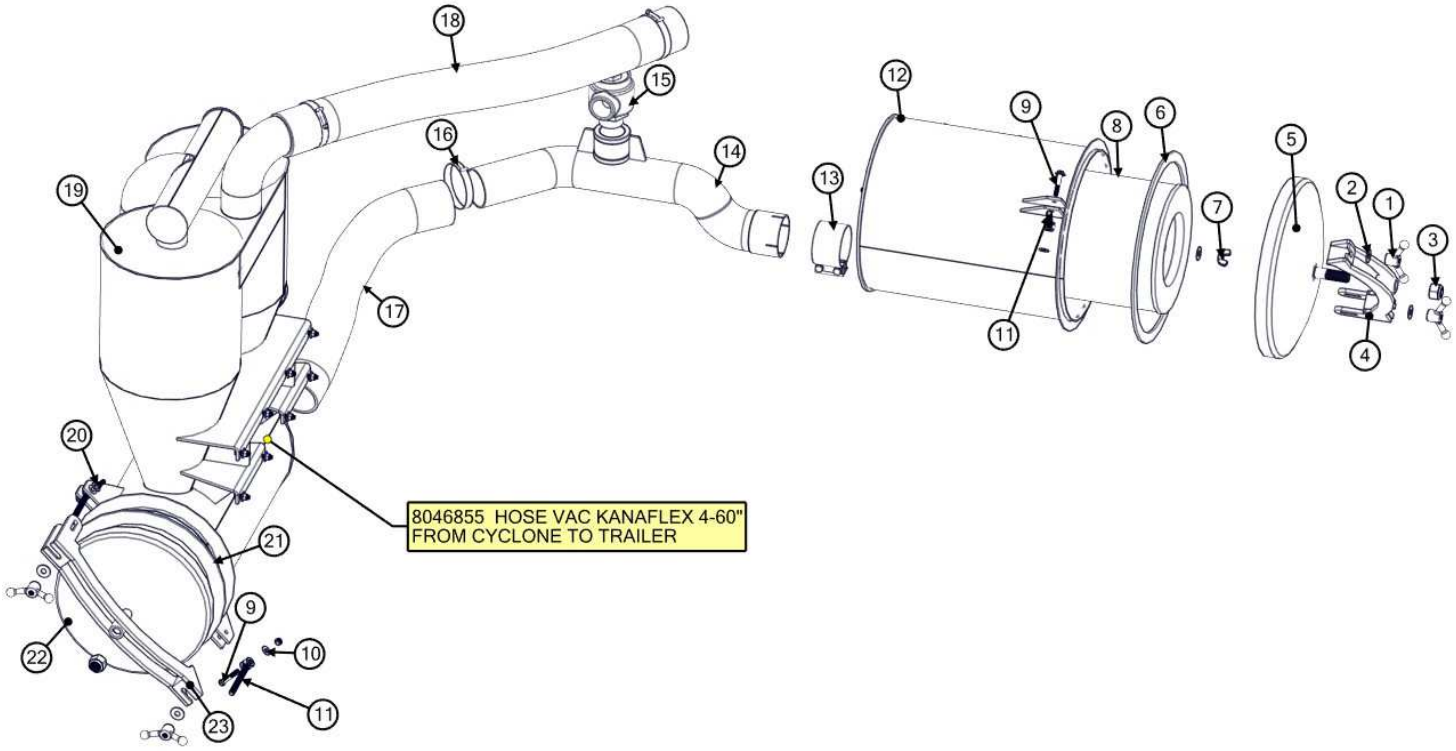

FILTRATION ASSEMBLY

BOM ID	Qty	Name
1	4	8041594 HANDLE,WING
2	5	U200100 WASHER FLAT .500 ZP
3	2	U120060 NUT,LOCK 1.00-8 NY ZP G2
4	1	8041554 LATCH,AIR FILTER DOME REV FLOW
5	1	8041387 DOME,AIR FILTER REV. FLOW
6	1	8041613 GASKET,REV FLOW AIR FILTER HD
7	1	U130080 NUT,WING .500-13 ZP G2
8	1	8031293 FILTER,AIR WASHABLE 1025 CFM
9	2	U000520 SCREW,HC .375-16 X 2.25 ZP G5
10	20	U200060 WASHER FLAT .375 ZP
11	4	8041593 BOLT,EYE 1/2-13 X 6
12	1	8049538 FILTER HSG AIR 1025 RF
13	1	8030400 CLAMP, BAND 4.00" EXHAUST
14	1	8094478 PIPE WELDMENT 4" AIR CAN TO CYCLONE
15	1	8041035 VALVE, 2.5" AIR RELIEF SET 5PSI
16	5	8042606 CLAMP, HOSE T-BOLT 450
17	1	8041597-029.25 HOSE VAC AG SUCTION 4-29.25"
18	1	8046575 HOSE VAC AG SUCTION 4-51"
19	1	8046458 CYCLONE HOUSING 1025 RF
20	2	U000580 SCREW,HC .375-16 X 3.50 ZP G5
21	1	8041612 GASKET, REV FLOW CYCLONE
22	1	8041402 DOME, CYCLONE REV FLOW
23	1	8041552 LATCH, CYCLONE DOME REV FLOW

TANK SKID ASSEMBLY

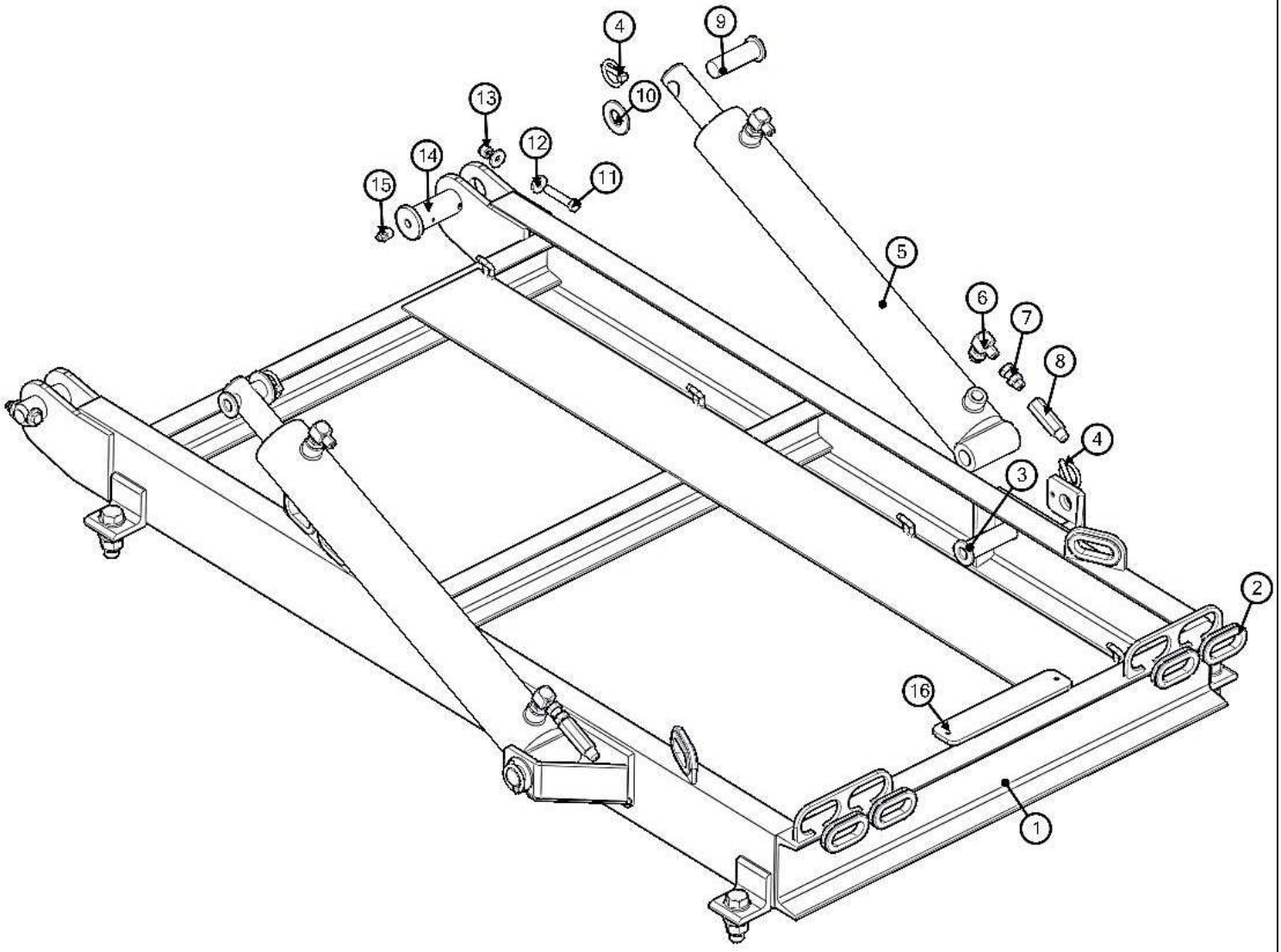

TANK SKID ASSEMBLY

BOM ID	Qty	Name	
1	1	8092337	SKID, TANK 500 & 800
2	8	8042812	GROMMET, 2"ID X 3"OD X 1/4"WOG
3	2	8092495	WELDMENT, PIN 1"DIA X 5 1/2"
4	4	U340050	PIN LINCH 3/16 X 1 9/16 ZP
5	2	8030359	CYLINDER, HYD 3" X 20"
6	4	T401270	ELBOW, 90 8MB-6MJ
7	2	T400036	UNION, 6MB-6FJ
8	2	8048286	VALVE, CHECK VELOCITY 6.0GPM
9	2	8042489	CYLINDER PIN
10	4	U200170	WASHER, FLAT 1.00 ZP
11	2	U000520	SCREW, HC 3/8-16 X 2.25" ZP G5
12	4	U200060	WASHER, FLAT 3/8" ZP
13	2	U120110	NUT, LOCK 3/8-16 NY ZP
14	2	8092401	PIN, TANK PIVOT
15	2	T500100	FITTING, GREASE 1/4" NPT STR
16	1	8091150	STRIP, PLASTIC 1/4" X 2" X 15"

POWERPACK SKID ASSEMBLY

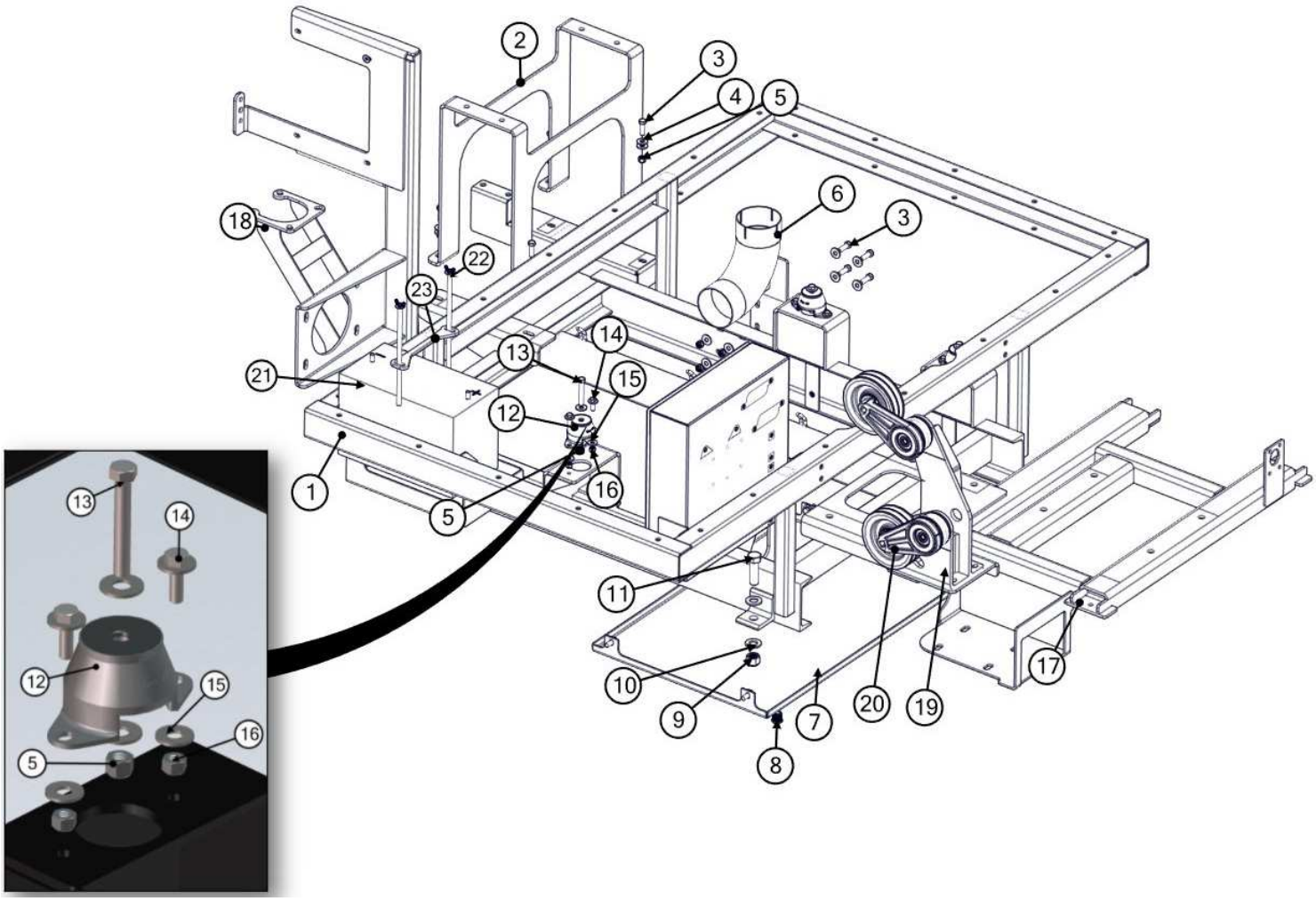

POWERPACK SKID ASSEMBLY

BOM ID	Qty	Name	
1	1	8092914	WELDMENT, SKID POWERPACK
2	1	8092593	BRACKET, HYDRAULIC RESERVOIR
3	8	U000440	SCREW, HC .375-16 X 1.25" ZP G5
4	16	U200060	WASHER, FLAT .375 ZP
5	12	U120110	NUT, LOCK .375-16 NY ZP
6	1	8092931	WELDMENT, SILENCER MOUNT
7	1	8092987	WELDMENT, DRIP PAN
8	1	T405060	PLUG, PIPE .500 NPT
9	4	U120040	NUT, LOCK NY .750-10 ZP G2
10	8	U200160	WASHER, FLAT .750 ZP
11	4	U001420	SCREW, HC .750-10 X 2.50 ZP G5
12	4	8090378	MOTOR MOUNT
13	4	U000540	SCREW, HC .375-16 X 2.50 ZP G5
14	8	U000200	SCREW, HC .312-18 X 1.00 ZP G5
15	16	U200040	WASHER, FLAT .312 ZP
16	8	U110040	NUT, HEX .312-18 NY ZP
17	1	8092957	WELDMENT, ENGINE SKID
18	1	8092673	WELDMENT, 4WAY SUPPORT
19	1	8049576	MOUNT, TENSIONER
20	2	8049156	AUTO TENSIONER FOR DUAL V BELT
21	1	X400050	BATTERY, 31-MHD WORKAHOLIC
22	2	8043742	BATTERY ROD HOLD DOWN VK
23	1	8050016	STRAP, BATTERY

CONTROL BOX ASSEMBLY

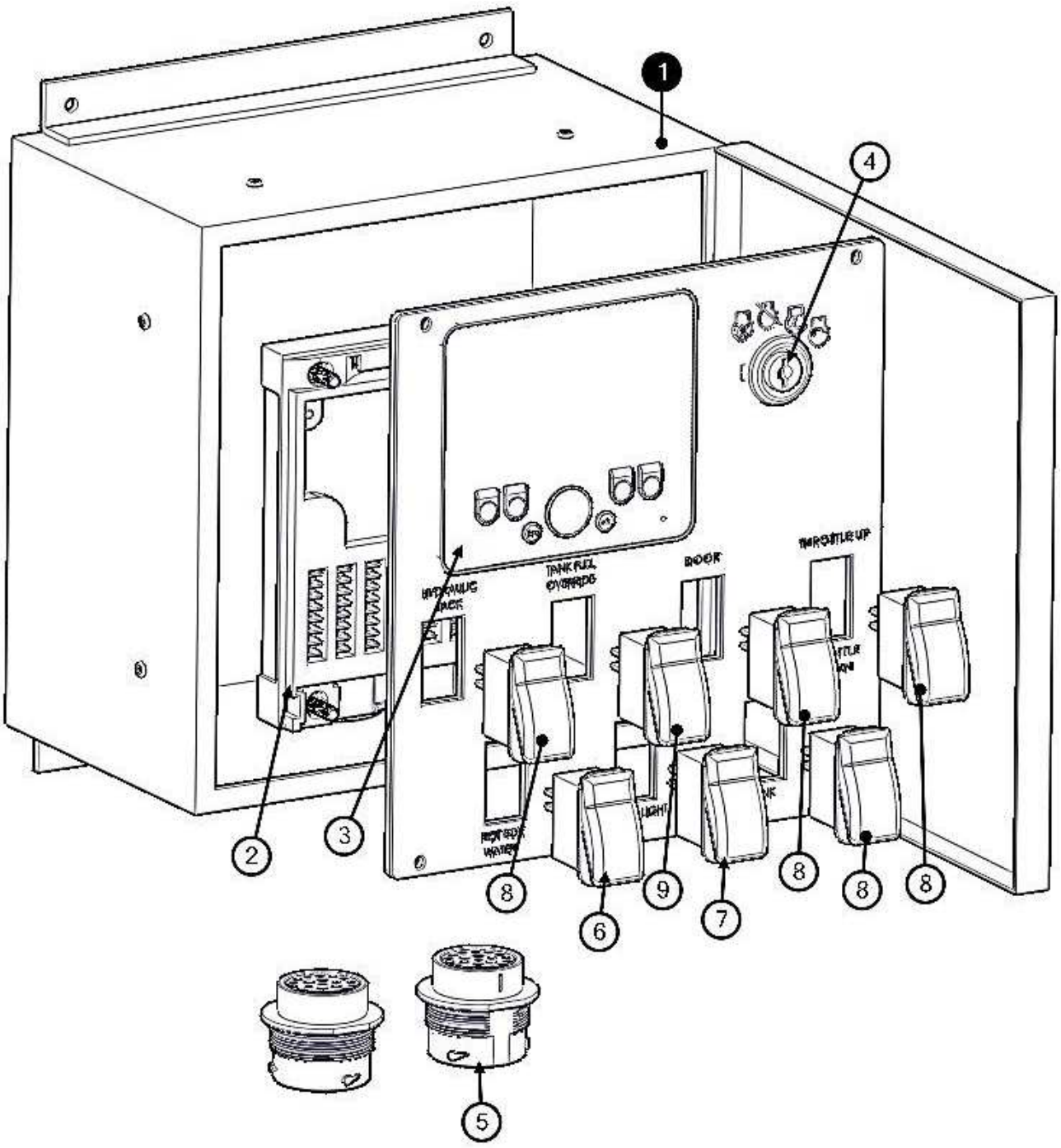

CONTROL BOX ASSEMBLY

BOM ID	Qty	Name	
1	1	8092975	BOX, CONTROL ENCLOSURE
2	1	8049526	CONTROLLER
3	1	8049525	CONTROL DISPLAY BC XT
4	1	8030458	SWITCH, IGNITION
5	2	X500004	RECEPTACLE, DEUTSCH 21 PIN
6	1	X000453	SWITCH, ROCKER ON-OFF-ON
7	1	X000452	SWITCH, ROCKER ON/OFF
8	4	X000450	SWITCH, ROCKER MOMENTARY ON-OFF-ON
9	1	X000451	SWITCH, ROCKER MOMENTARY OFF/ON

ENCLOSURE ASSEMBLY

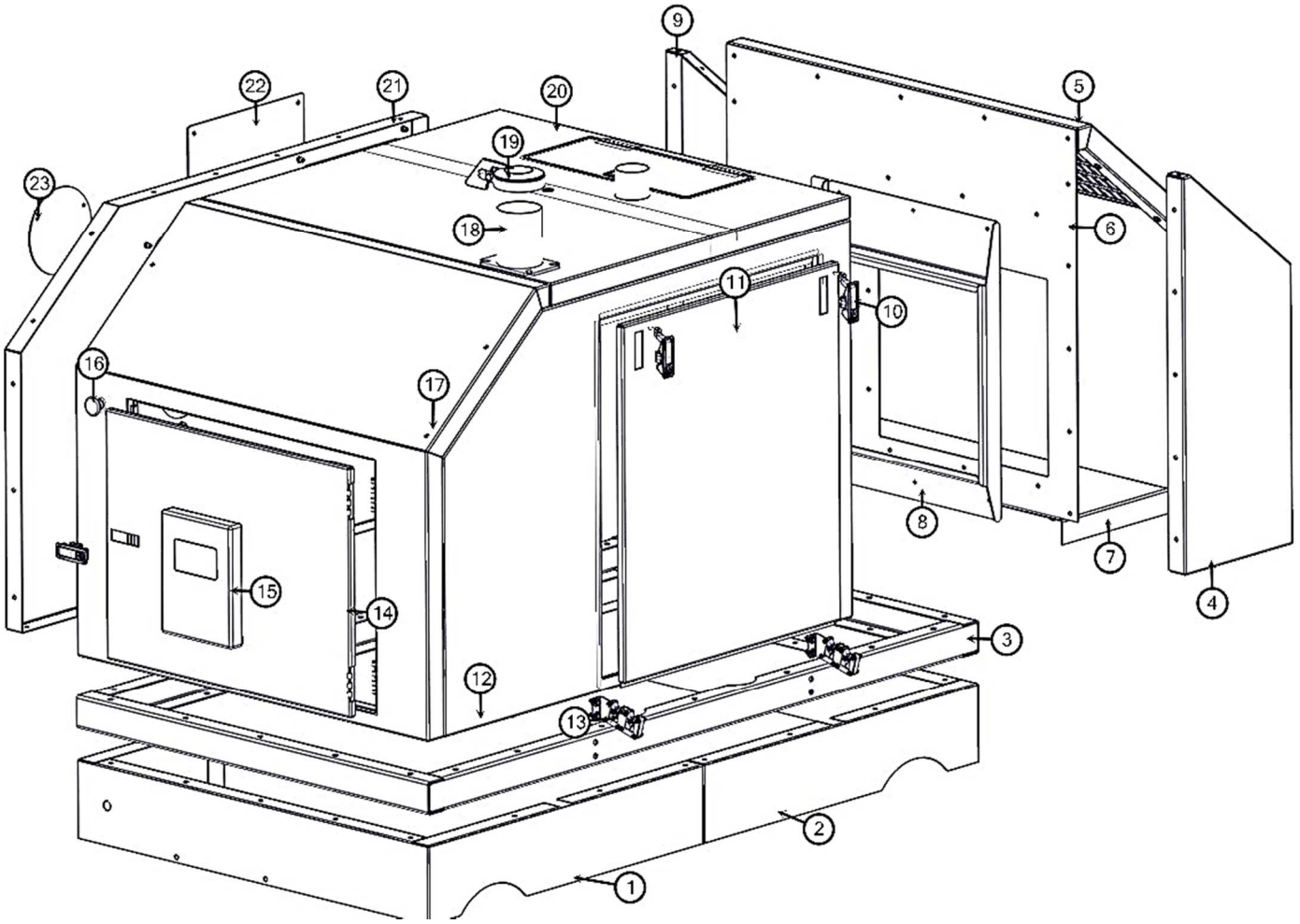

ENCLOSURE ASSEMBLY

BOM ID	Qty	Description	
1	1	8092882	PANEL, ENCLOSURE SKIRT CURBSIDE
2	1	8092883	PANEL, ENCLOSURE SKIRT STREETSIDE
3	1	8093289	WELDMENT, ENCLOSURE MOUNT
4	1	8092872	PANEL, ENCLOSURE FRONT STREETSIDE
5	1	8092876	PANEL, ENCLOSURE STREETSIDE
6	1	8092877	PANEL, ENCLOSURE PLENUM UPPER
7	1	8092878	PANEL, ENCLOSURE PLENUM LOWER
8	1	8092662	WELDMENT, RADIATOR AIR DUCT
9	1	8092873	PANEL, ENCLOSURE BACK STREETSIDE
10	4	8048788	LATCH COMPRESSION C2
11	1	8092881	DOOR, ENCLOSURE LIFT OUT FRONT
12	1	8092871	WELDMENT, ENCLOSURE FRONT PANEL CURBSIDE
13	2	8094491	ASSEMBLY, TOOL HOLDER
14	1	8092880	DOOR, ENCLOSURE HINGED CURBSIDE
15	1	E250210	BOX, SAFETY MANUAL
16	1	X000280	EMERGENCY STOP
17	1	8092875	PANEL, ENCLOSURE CURBSIDE
18	1	8093142	WELDMENT, EXHAUST ENCLOSURE
19	1	8040742	RAIN CAP, 4" SILENT
20	1	8092879	WELDMENT, ENCLOSURE TOP PANEL
21	1	8094766	ASSEMBLY, PANEL ENCLOSURE BACK CURBSIDE
22	1	8092885	ENCLOSURE COVER ACCESS PANEL
23	1	8094765	ENCLOSURE BACK PANEL COVER

ENGINE ASSEMBLY

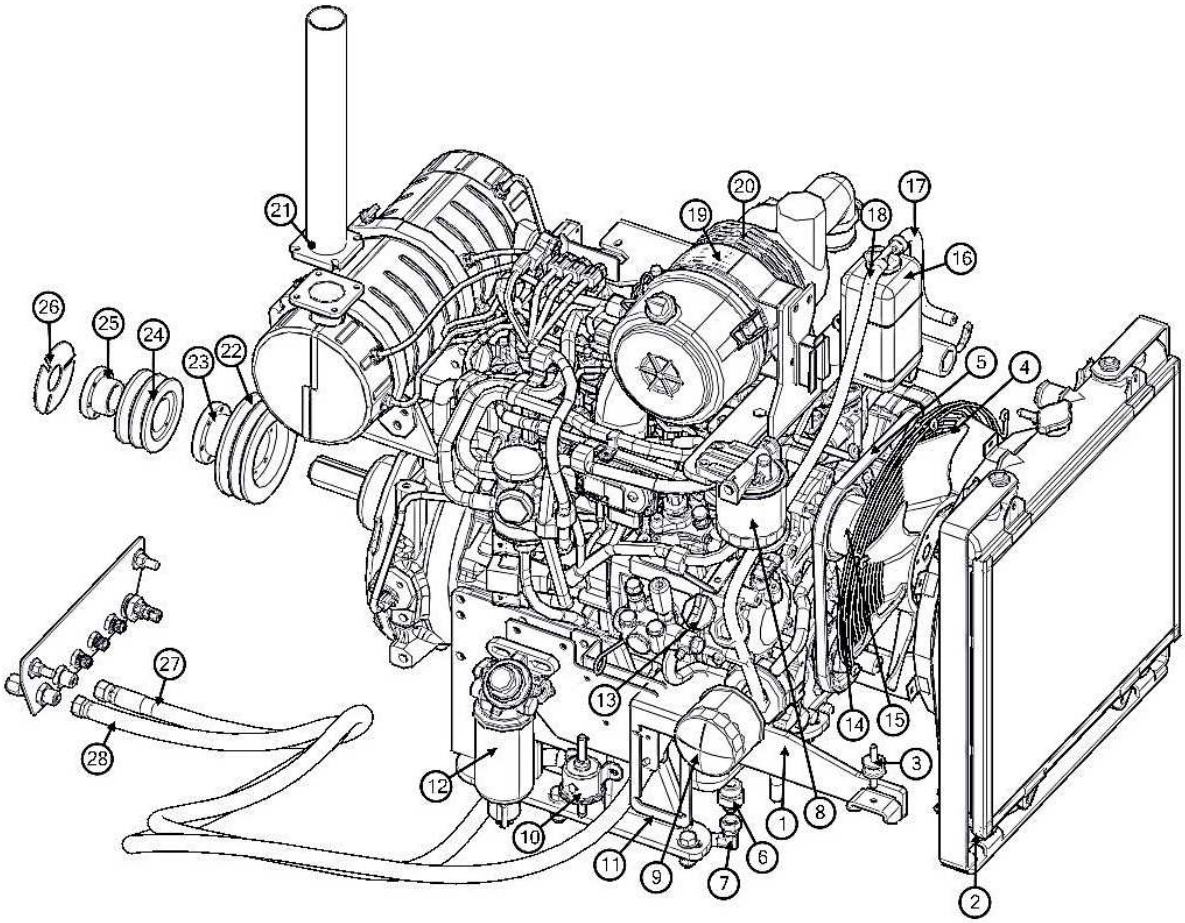

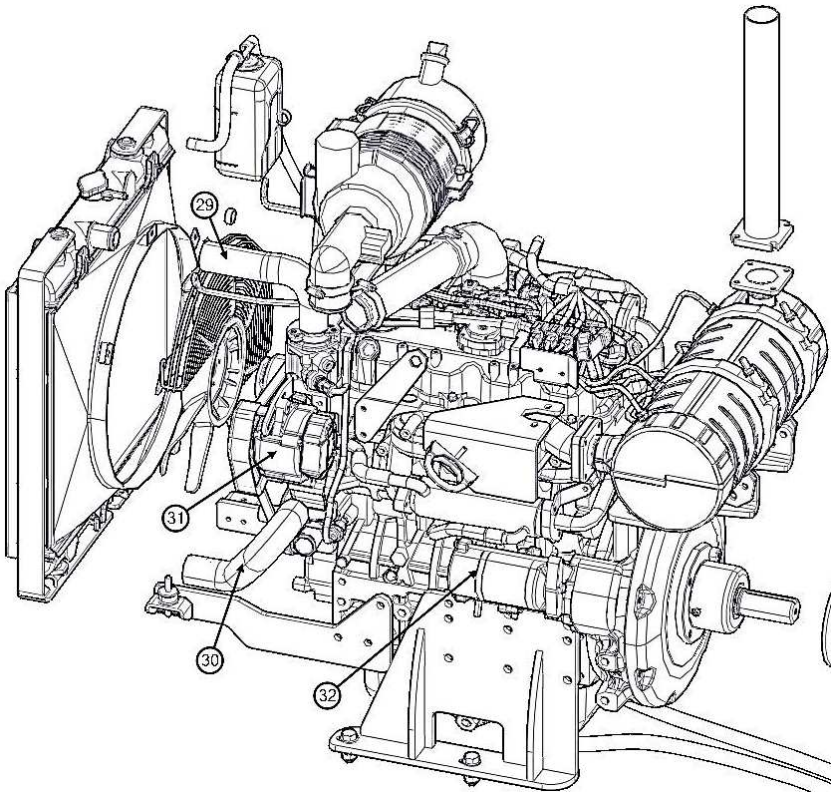

ENGINE ASSEMBLY

BOM ID	Qty	Name
1	1	8090544 ENGINE, KUBOTA 49HP
2	1	8090544-01 RADIATOR
3	2	8090544-02 ISOLATOR, RADIATOR
4	1	8090544-03 FAN
5	1	8090544-04 BELT, FAN
6	1	T401223 UNION, 8MJ-M22 MALE
7	1	T401625 ELBOW, 90 8FJ-8MJ
8	1	8090544-07 FILTER, FUEL
9	1	T700077 FILTER, OIL
10	1	8090544-06 PUMP, FUEL
11	1	8093106 MOUNT, FUSE BLOCK
12	1	8090941-01 FILTER, FUEL WATER SEPARATOR
13	1	8090544-08 PLUG, OIL FILL
14	1	8090544-09 GASKET, WATER PUMP
15	1	8090544-10 PUMP, WATER
16	1	8090544-11 TANK, OVERFLOW
17	1	8049946-09.00 HOSE, FUEL 5/16 X 9"LG
18	1	8049946-40.00 HOSE, FUEL 5/16 X 40"LG
19	1	8090544-12 AIR FILTER OUTER
20	1	8090544-13 AIR FILTER ELEMENT
21	1	8092709 WELDMENT, EXHAUST KUBOTA 49HP
22	1	8090884 SHEAVE, 5.50"DIA QD2/5V5.50
23	1	8090885 BUSHING, SDA1.1/2
24	1	8090882 SHEAVE, 5.50"DIA QD2A3.2
25	1	8049387 BUSHING, SH1.1/2
26	1	8048364 RETAINER for 1 1/2" BUSH ING 3 HOLE
27	1	8093181 HOSE ASSY VAC 8-72" ST-ST
28	1	8030540-090.00 HOSE VAC PUSH 8-90"LG
29	1	8090544-14 HOSE, RADIATOR UPPER
30	1	8090544-15 HOSE, RADIATOR LOWER
31	1	8090544-16 ALTERNATOR
32	1	8090544-17 STARTER

BLOWER ASSEMBLY

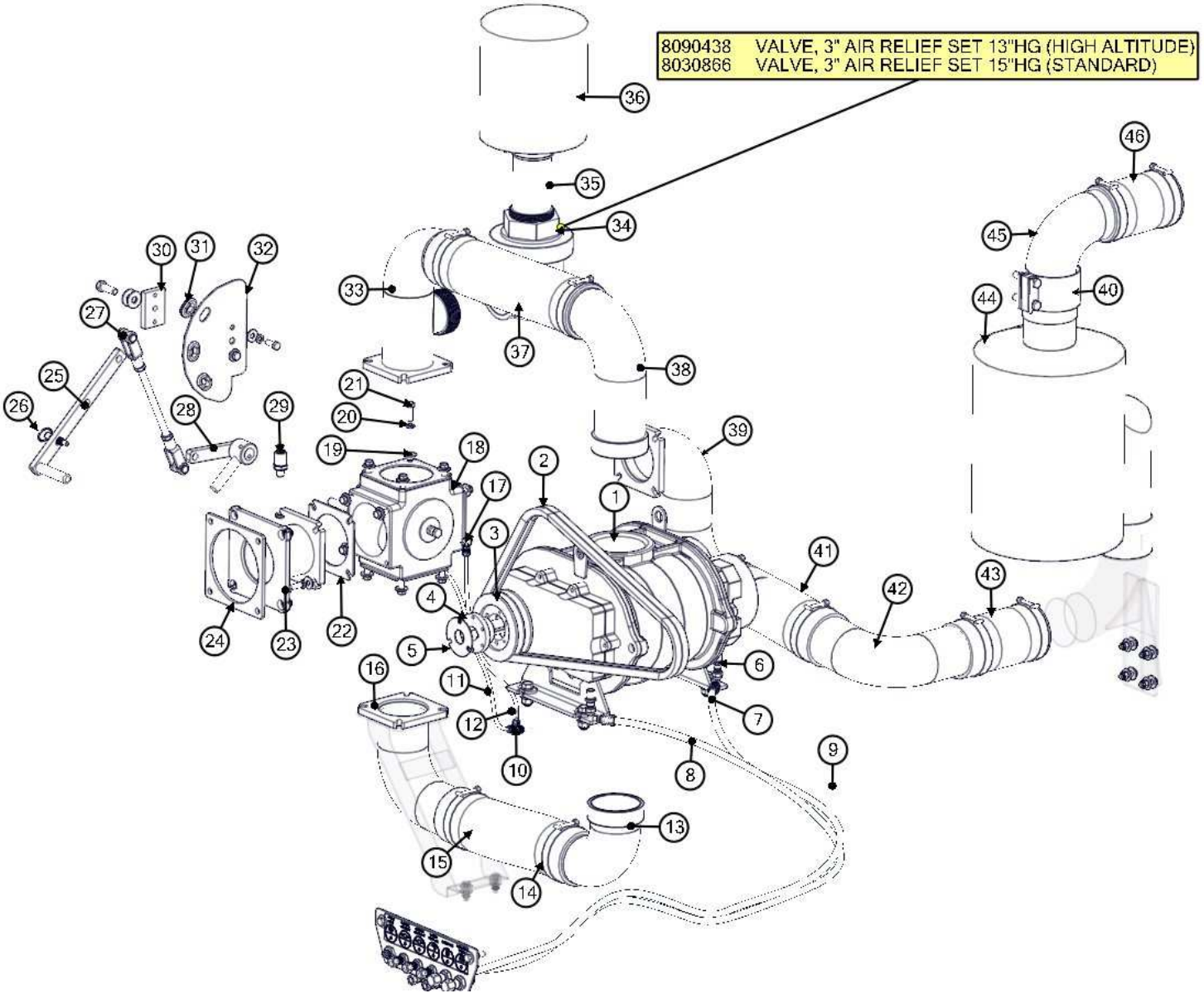

BLOWER ASSEMBLY

BOM ID	Qty	Name
1	1	8040002 PUMP, VAC 1025 LH SHAFT BOTOUT
2	2	8090883 BELT, 5VX630 63.0
3	1	8090884 SHEAVE, 5.50"DIA QD2/5V5.50
4	1	8090886 BUSHING, 1 1/8"DIA SDS 1 1/8
5	1	8041798 RETAINER for 1 1/8" BUSHING
6	2	T400028 UNION, 6MP-6MJ
7	1	8093180 HOSE ASSY VAC 6-83" ST-90
8	1	8043180 HOSE ASSY VAC 6-83" ST-90
9	1	8091531-125.00 TUBE NYLON 1/4 X 125"
10	1	T402009 TEE 1_4TB X 1_4TB X 1_4TB
11	1	8091531-022.00 TUBE NYLON 1/4 X 22"
12	1	8091531-017.00 TUBE NYLON 1/4 X 17"
13	1	8092507 WELDMENT, EXHAUST BLOWER
14	10	8042606 CLAMP, HOSE T-BOLT 450
15	1	8041597-015.50 HOSE VAC AG SUCTION 4-15 1/2"
16	1	8092504 WELDMENT, EXHAUST 4WAY BOTTOM
17	2	T401096 ELBOW, 90 1/8"MNPT X 1/8"FNPT
18	1	8041177 VALVE, 4WAY 4" NPT THREADS
19	16	U200060 WASHER, FLAT 3/8" ZP
20	16	U210060 WASHER, LOCK 3/8" ZP
21	16	U000440 SCREW, HC 3/8-16 X 1.25" ZP G5
22	4	8043554 GASKET, 4WAY VALVE 4"
23	1	8092505 WELDMENT, EXHAUST 4WAY TO AIR
24	1	8046191 GASKET, DOOR INLET/OUTLET
25	1	8092769 ASSEMBLY, 4-WAY ACTION ARM
26	1	8041595 PIN, SPRING REV FLOW HANDLE
27	1	8092774 ROD, 4-WAY ACTION CONNECTING
28	1	8092643 WELDMENT, 4-WAY ACTUATOR
29	1	X000085 PRESSURE TRANSDUCER
30	1	8092770 MOUNT, 4-WAY ACTION ROD
31	3	8048585 GROMMET, REV FLOW PLATE
32	1	8092766 PLATE, 4-WAY VALVE
33	1	8092503 WELDMENT, EXHAUST 4WAY TOP
34	1	8030866 VALVE, 3" AIR RELIEF SET 15"HG
35	1	8045238 UNION, EXHAUST 3" OD-MNPT
36	1	8043553 FILTER, AIR 3" 245 CFM
37	1	8041597-017.75 HOSE VAC AG SUCTION 4-17 3/4"
38	1	8092506 WELDMENT, EXHAUST
39	1	8094488 WELDMENT, EXHAUST 4WAY TO SILENCER
40	2	8030400 CLAMP, BAND 4" EXHAUST
41	1	8041597-012.50 HOSE VAC AG SUCTION 4-12 1/2"
42	1	8041814 ELBOW, 90 4"EXHAUST (4"RAD OD-OD)
43	1	8041597-008.00 HOSE VAC AG SUCTION 4-8"
44	1	8030917 SILENCER, 4" COWL for 1025 CFM
45	1	8092937 ELBOW, 90 4" SILENCER ROUTING
46	1	8041597-007.00 HOSE VAC AG SUCTION 4-7"

WATER PUMP ASSEMBLY

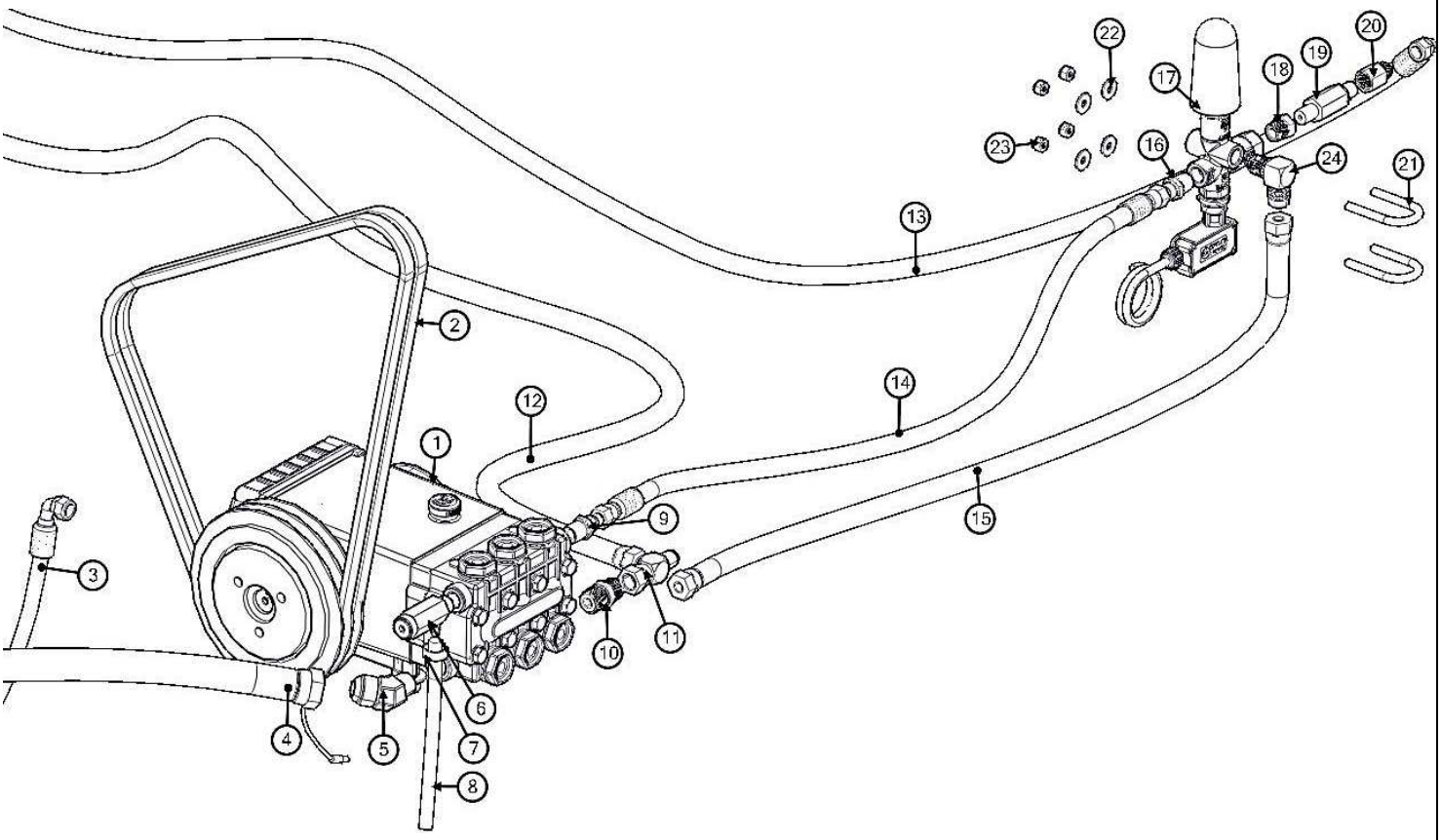

WATER PUMP ASSEMBLY

BOM ID	Qty	Name
1	1	8031388 PUMP, WATER T2021L & CLUTCH 5.6
2	2	8090881 BELT, AX52 54.09"EL
3	1	8093179 HOSE ASSY VAC 6-19 1/4" ST-90 (DRAIN)
4	1	8093340 HOSE VAC PUSH 8-38"LG
5	1	T401561 ELBOW, 45 8MP-12MJ
6	1	8030340 VALVE, RELIEF WATER PRESET 4700PSI
7	1	U800030 CLAMP, HOSE 5/16"-7/8"
8	1	8049946-007.00 HOSE, FUEL 5/16 X 7"
9	1	T400028 UNION, 6MP-6MJ
10	1	T400040 UNION, 8MP-8MJ
11	1	T402155 TEE, 8FJ-8MJ-8MJ
12	1	8030540-132.00 HOSE VAC PUSH 8-132"
13	1	8093192 HOSE ASSY VAC 6-156" ST-90
14	1	8041152 HOSE ASSY VAC 6-30" ST-ST
15	1	8093341 HOSE VAC PUSH 8-31"LG
16	1	T400028 UNION, 6MP-6MJ
17	1	8048979 VALVE, UNLOADER BLUE W/SWITCH
18	1	T400023 REDUCER, 6MP-4FP
19	1	8030923 FILTER, WATER HIGH PRESSURE
20	1	8031126 REDUCER, 4FP-6MJ
21	2	U010017 U-BOLT, .250-20
22	4	U200020 WASHER, FLAT 1/4" ZP
23	4	U120000 NUT, LOCK 1/4-20 ZP G2
24	1	T401120 ELBOW, 90 6MP-8MJ

WATER TANK ASSEMBLY
50 GALLON

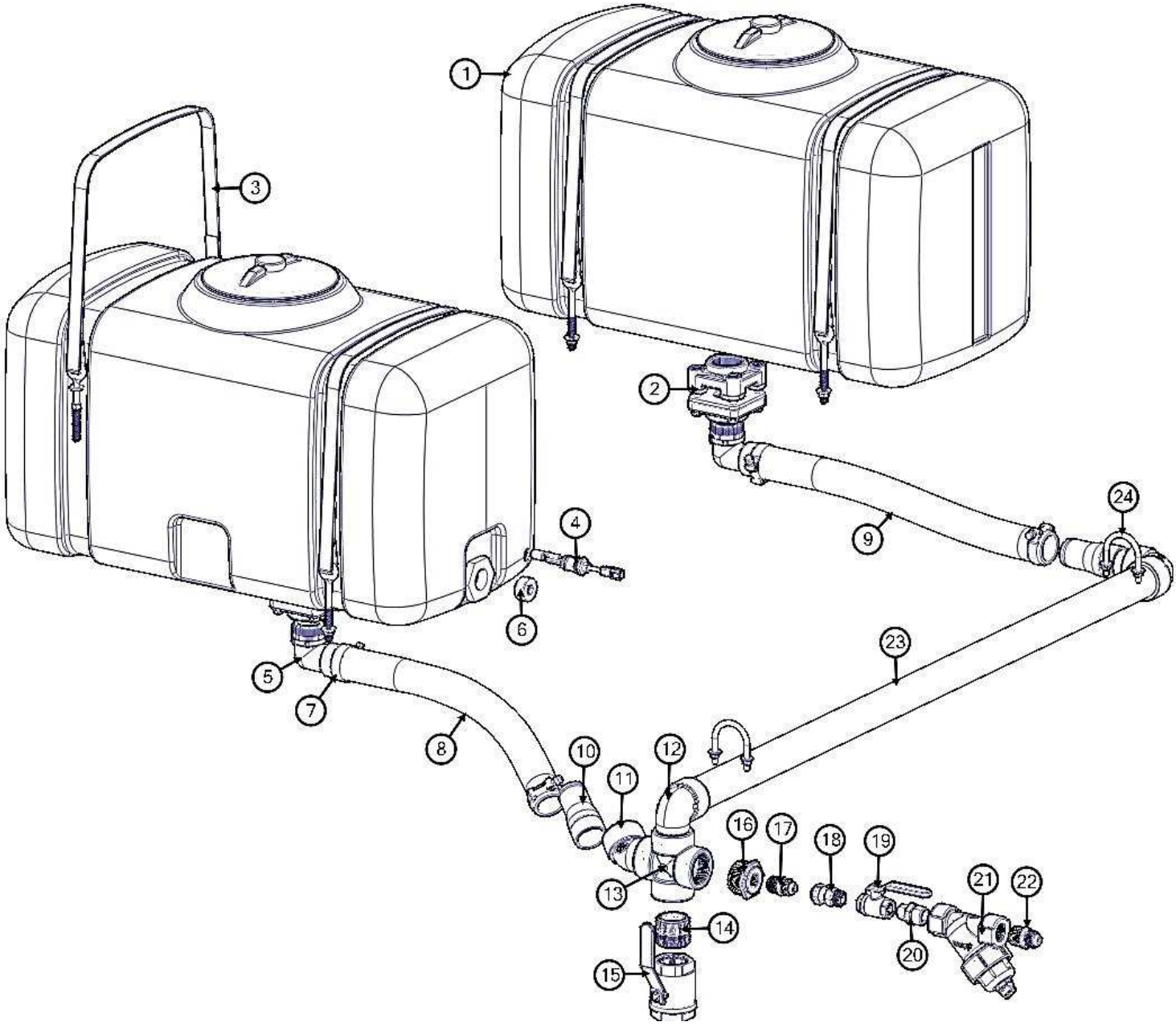

WATER TANK ASSEMBLY
50 GALLON

BOM ID	Qty	Name
1	2	8034151 TANK, WATER 50 GAL
2	2	8049750 BULKHEAD, 2" BOT. DRAIN BANJO
3	4	8043758 STRAP, EYEBOLT 1" X 55" OAL
4	1	8090896 SWITCH, WATER LEVEL (HORIZ)
5	2	8090209 FITTING, HOSE BARB 90 2" BANJO
6	2	T405068 PLUG, 1 1/4"NPT HEX SOCKET HEAD
7	4	8044580 CLAMP, HOSE T-BOLT 256
8	1	8043398-028.50 HOSE VAC CLEAR VINYL 2"-28.50"LG
9	1	8043398-027.50 HOSE VAC CLEAR VINYL 2"-27.50"LG
10	2	T410115 FITTING, 2"MNPT - 2" BARB STEEL
11	1	8090206 FITTING, ELBOW 45 2" BANJO
12	1	8090207 FITTING, ELBOW 90 2" BANJO
13	1	8091712 FITTING, CROSS 2"NPT BANJO
14	1	8030409 NIPPLE, CLOSE 2" SCHD 40 IRON
15	1	8090233 VALVE, BALL 2" W/LEVER HANDLE
16	1	8090208 FITTING, REDUCER BUSHING 2" X 3/4" BANJO
17	1	T400100 UNION, 3/4"MP - 3/4"MJ
18	1	T400101 UNION, 3/4"FJ - 3/4"MP
19	1	T000185 VALVE, BALL 3/4"FNPT BRASS
20	1	T404060 REDUCER, 1"MP - 3/4"MP
21	1	8040186 STRAINER, Y 1" BANJO
22	1	T400450 REDUCER, 1"MP - 3/4"MJ
23	1	8092712 PIPE, SCHD 40 2" X 61.50"LG
24	2	8031373 CLAMP, U-BOLT 2.5" EXHAUST

WATER TANK ASSEMBLY
125 GALLON

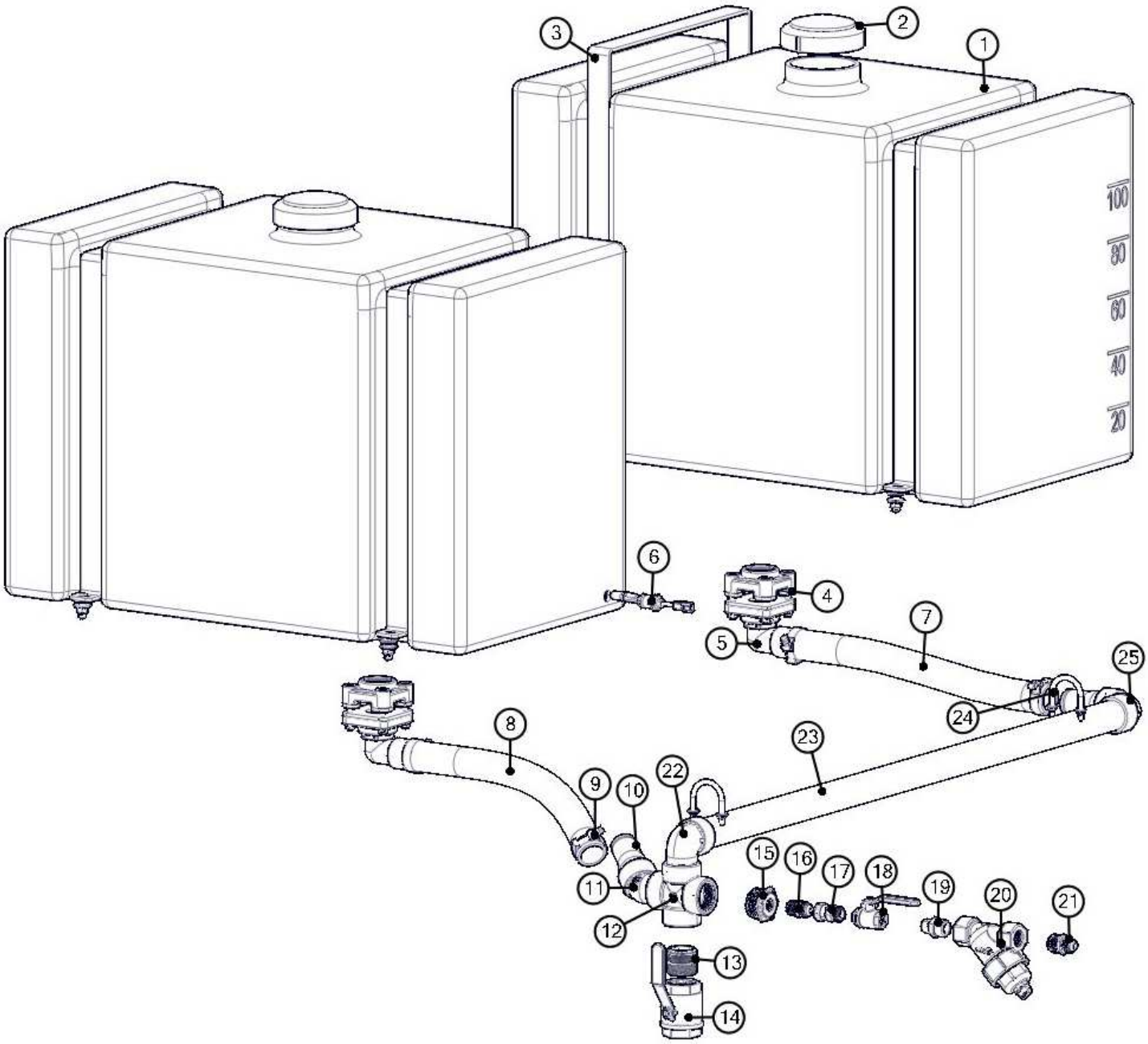

WATER TANK ASSEMBLY
125 GALLON

BOM ID	Qty	Name
1	2	8092393 TANK, WATER 125 GAL
2	2	8041119 LID, WATER TANK 125 GAL
3	4	8092395 STRAP, TANK SADDLE 125
4	2	8049750 BULKHEAD, 2" BOT. DRAIN BANJO
5	2	8090209 FITTING, HOSE BARB 2" 90 BANJO
6	1	8090896 SWITCH, WATER LEVEL HORIZ
7	1	8043398-027.50 HOSE VAC CLEAR VINYL 2" X 27.50"LG
8	1	8043398-028.50 HOSE VAC CLEAR VINYL 2" X 28.50"LG
9	4	8044580 CLAMP, HOSE T-BOLT 256
10	2	T410115 FITTING, 2"MNPT - 2"BARB STEEL
11	1	8090206 FITTING, ELBOW 45 2" BANJO
12	1	8091712 FITTING, CROSS 2"NPT BANJO
13	1	8030409 NIPPLE, CLOSE 2" SCHD 40 IRON
14	1	8090233 VALVE, BALL 2" W/LEVER HANDLE
15	1	8090208 FITTING, REDUCER BUSHING 2" X 3/4" BANJO
16	1	T400100 UNION, 12MP-12MJ
17	1	T400101 UNION, 12FJ-12MP
18	1	T000185 VALVE, BALL 3/4"FNPT BRASS
19	1	T404060 REDUCER, 16MP-12MP
20	1	8040186 STRAINER, Y 1" BANJO
21	1	T400450 REDUCER, 1"MP - 3/4"MJ
22	1	8090207 FITTING, ELBOW 90 2" BANJO
23	1	8092712 PIPE, SCHD 40 2" X 61.50"LG
24	2	8031373 CLAMP, U-BOLT 2.5" EXHAUST
25	1	8092856 FITTING, ELBOW 90 2" FP-FP

ANTIFREEZE/WATER REEL ASSEMBLY

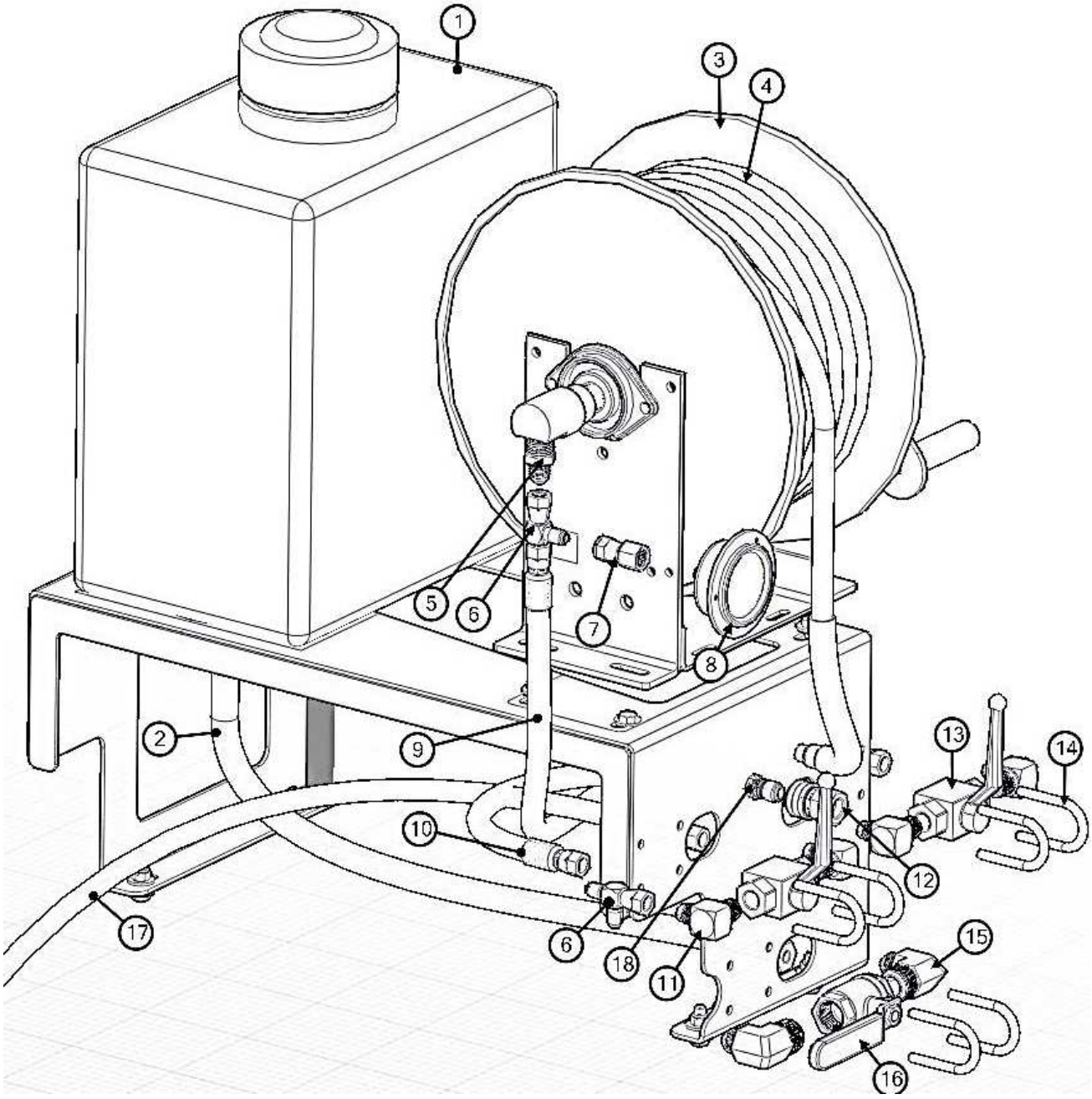

ANTIFREEZE/WATER REEL ASSEMBLY

BOM ID	Qty	Name
1	1	8092860 ANTIFREEZE TANK ASSEMBLY
2	1	8030540-022.25 HOSE VAC PUSH 8 - 22.25"
3	1	8030879 REEL ONLY WATER HANNAY 3/8 X 75'
4	1	8041830 HOSE ASSEMBLY 3/8" X 50' 4000 PSI
5	1	T400029 REDUCER, 8MP-6MJ
6	2	T402153 TEE, 6FJ-6MJ-6MJ
7	1	8031125 REDUCER, 4FP-6FJ
8	1	8030372 GAUGE, PRESSURE WATER 5000 PSI
9	1	8092869 HOSE ASSY VAC 6-28" ST-ST
10	1	8090243 HOSE ASSY VAC 6-17 1/2" ST-ST
11	4	T401102 ELBOW, 90 6MP-6MJ
12	1	8091355 QUICK DISCONNECT 3/8" MALE
13	2	8030351 VALVE, BALL 3/8" 3K PSI
14	6	U010017 U-BOLT 1/4"-20
15	2	T401160 ELBOW, 90 12MP-8MJ
16	1	T000185 VALVE, BALL 3/4" FNPT BRASS
17	1	8093197 HOSE ASSY VAC 6-280" ST-90
18	1	8091356 QUICK DISCONNECT 3/8" MALE X MALE

PAGE LEFT BLANK

VACUUM TOOLS LAYOUT

SUCTION TOOL

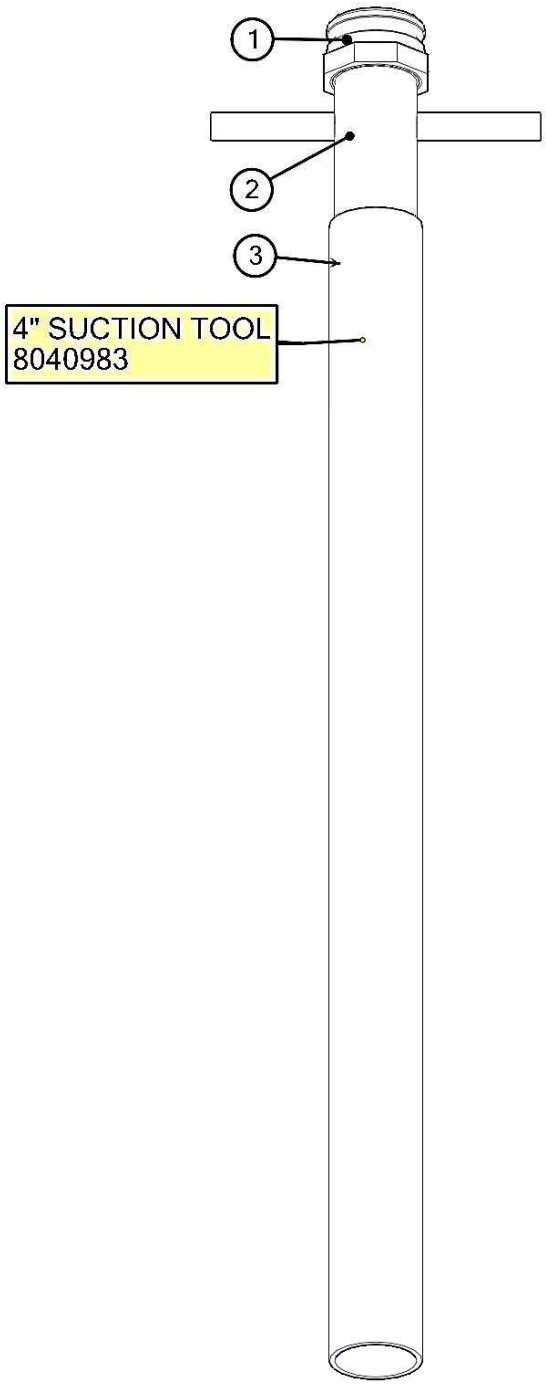

BOM ID	Qty	Name
1	1	8030844 COUPLING, BANJO 4"
2	1	8040981 VAC TOOL HANDLE ASSEMBLY 4"
3	1	8040982 TUBE, VACUUM PVC 4"

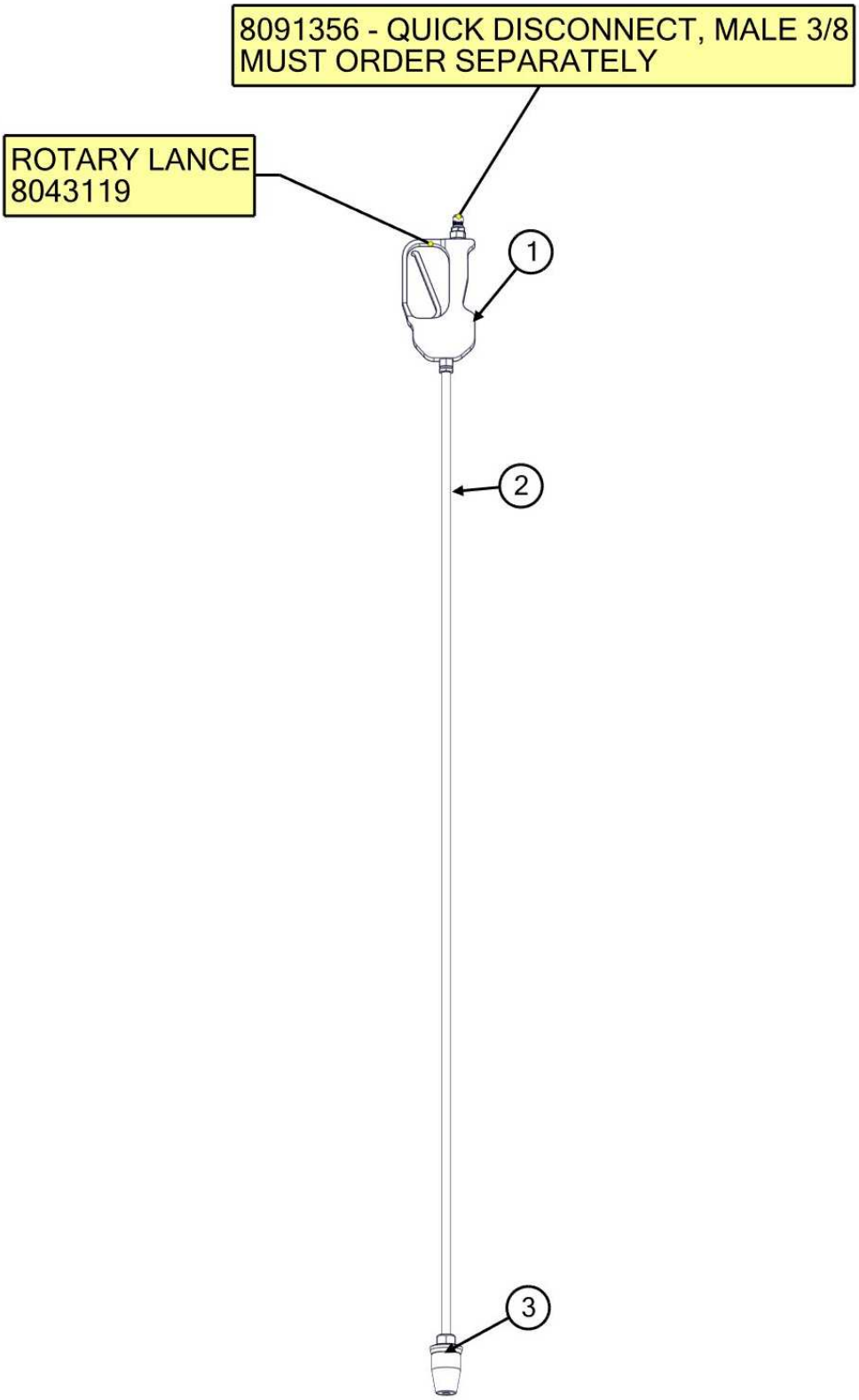
8091356 - QUICK DISCONNECT, MALE 3/8
MUST ORDER SEPARATELY
ROTARY LANCE
8043119
1
2
3

BOM ID	Qty	Name
1	1	8048567 GUN, SPRAY STRAIGHT
2	1	8043765 TUBE, CHROME 1/4NPT 60"LG
3	1	8048739 NOZZLE, ROTATING 055

* NOT SHOWN

8092777 ROD RETAINING ASSEMBLY, TOOL STORAGE

WASH WAND

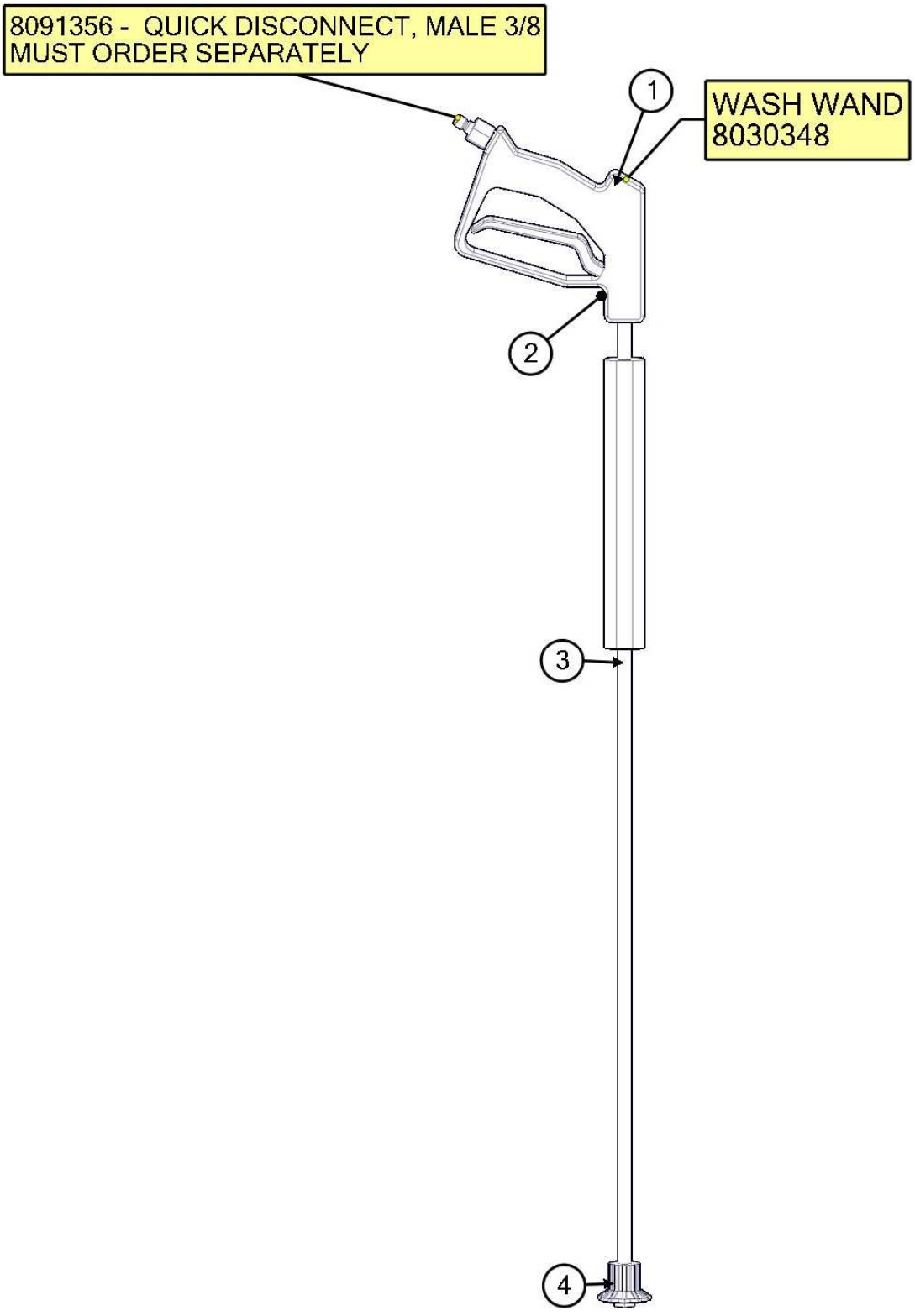
8091356 - QUICK DISCONNECT, MALE 3/8
MUST ORDER SEPARATELY
1
WASH WAND
8030348
2
3
4

BOM ID	Qty	Name
1	1	8030348 WAND COMPLETE
2	1	8030928 TRIGGER ASSEMBLY
3	1	8030847 WAND
4	1	8031303 NOZZLE, #10 40DEG
5	1	8091383 STORAGE, TOOL PVC 2 1/2 X 48"LG

* NOT SHOWN

1 8092777 ROD RETAINING ASSEMBLY, TOOL STORAGE

HOT BOX ASSEMBLY

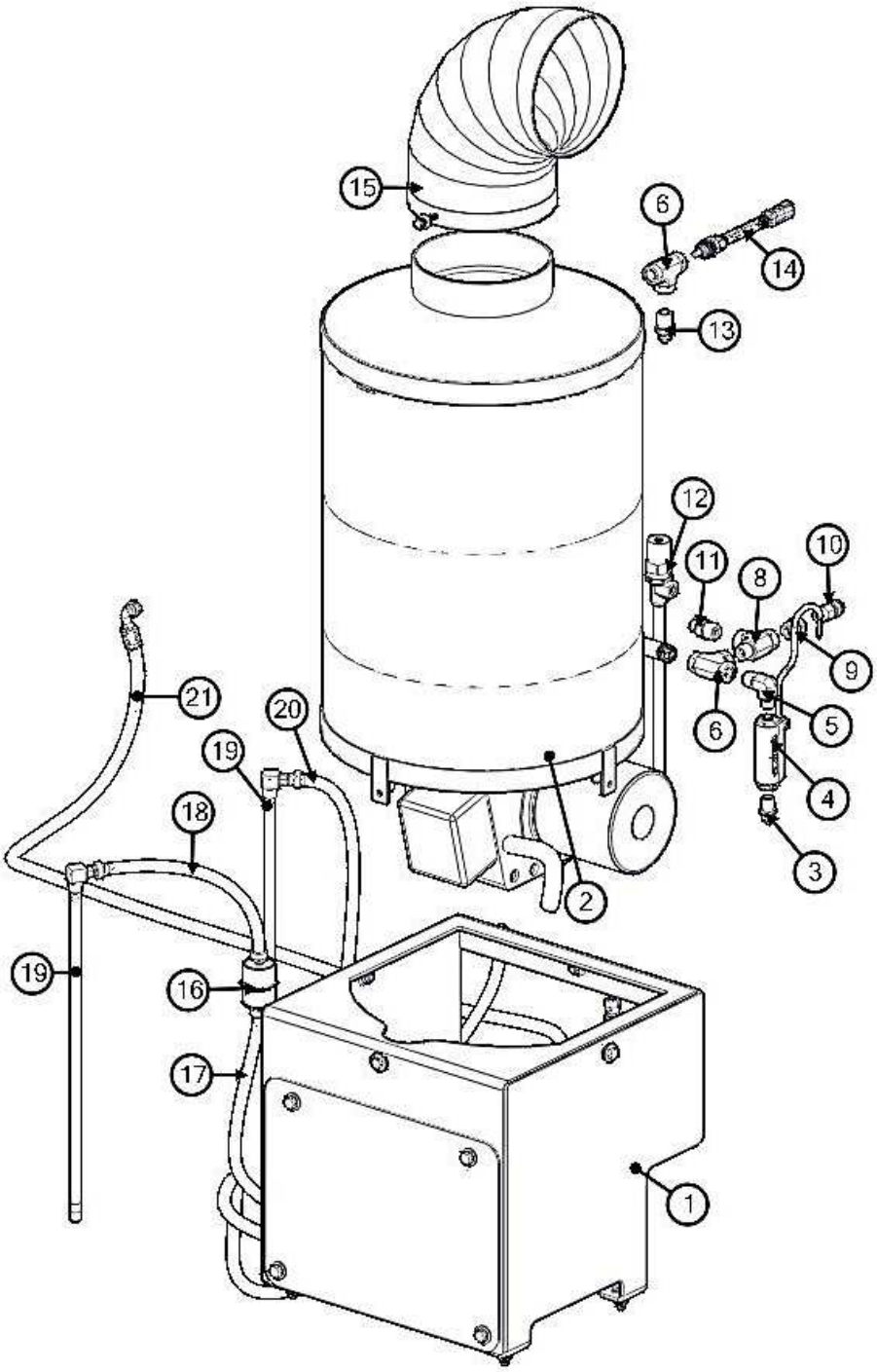

BOM ID	Qty	Name
1	1	8092562 BRACKET, HOT BOX
2	1	8046448 HOT BOX (VERTICAL)
3	1	T400028 UNION, 6MP-6MJ
4	1	8047724 SWITCH, FLOW NO 4KSI 3/8"FNPT
5	1	T401136 ELBOW, 90 8MP-6MP
6	2	T402130 TEE, 8FP-8FP-8FP STEEL
8	1	T402156 TEE, 8MP-8FP-8FP
9	1	T400024 REDUCER, 8MP-6FP
10	1	8046976 VALVE, PRESSURE RELIEF BURST DISK 5000PSI
11	1	T400123 REDUCER, 8MP-4MP
12	1	8048030 VALVE, PRESS REG 5070PSI 8GPM
13	1	8031291 FITTING, 8MP-6MJ
14	1	8048033 SWITCH, TEMP NC 100 & 165 DEG F 5000PSI
15	1	8046535 ELBOW, EXHAUST 8"
16	1	8030656 FILTER, FUEL INLINE
17	1	8049946-014.50 HOSE, FUEL 5/16-14 1/2"
18	1	8049946-031.00 HOSE, FUEL 5/16-31" (SUPPLY)
19	2	8092990 KIT, FUEL PICKUP & RETURN
20	1	8049946-043.50 HOSE, FUEL 5/16-43 1/2" (RETURN)
21	1	8046899 HOSE ASSY VAC 6-143" ST-90 WATER SUPPLY LINE

ARROWBOARD ASSEMBLY

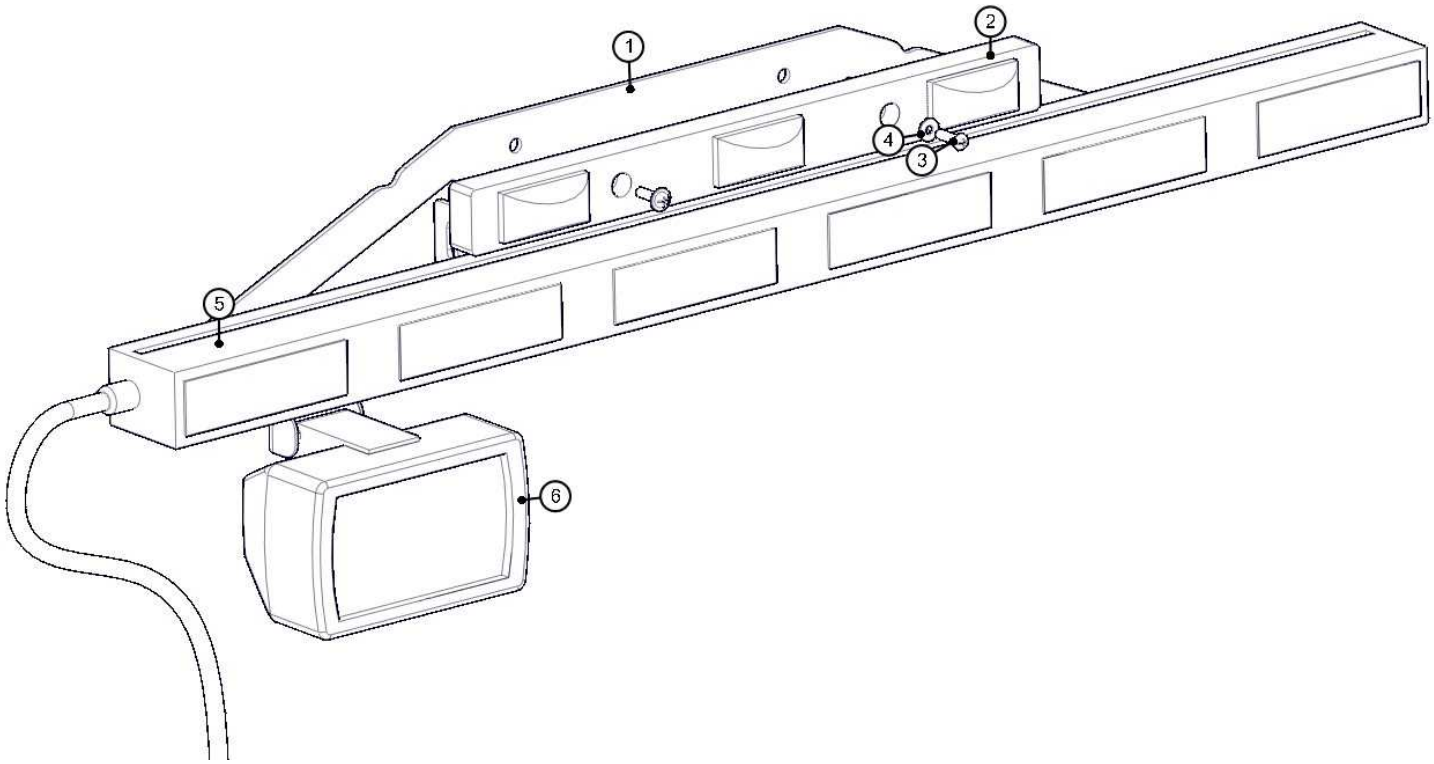

BOM ID	Qty	Description	
1	1	8093908	BRACKET, LIGHT DIRECTIONAL (BOOM)
2	1	8041509	LIGHT, TANK CLEARANCE 3 BAR
3	2	U030809	SCREW, PAN HD PHIL 10-24 X .75
4	4	U200001	WASHER, FLAT #10
5	1	8093914	LIGHT, DIRECTIONAL LED NO CONTROL W/PLUG
6	1	8043138	LIGHT, WORK VAC TRAP DEUTSCH

OPTIONS

BOOM ASSEMBLY
EXTENSION ARM

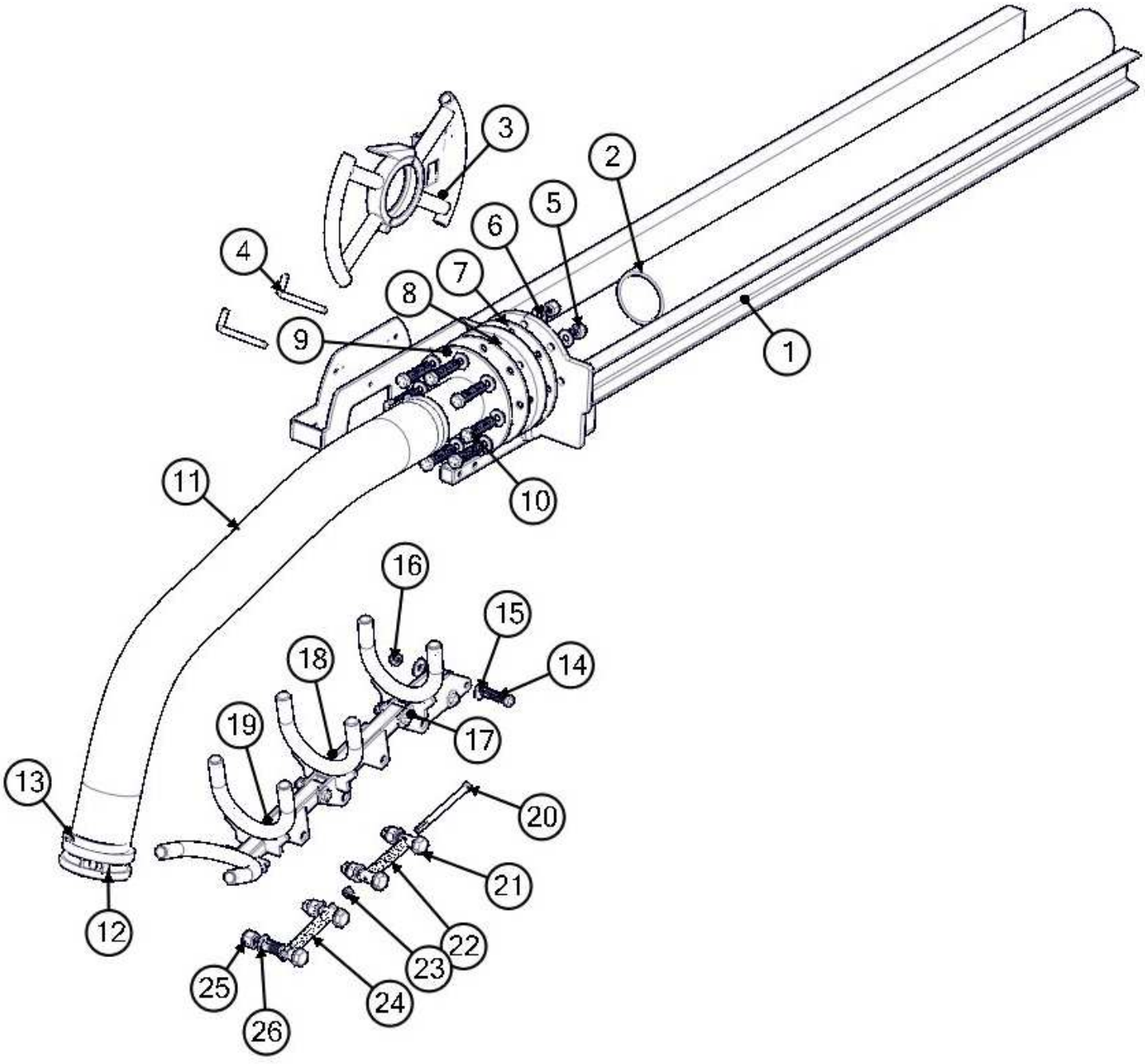

BOOM ASSEMBLY EXTENSION ARM

BOM ID	Qty	Name
1	1	8046591 BOOM EXTENSION ARM WELDMENT
2	1	8042160 BOOM TUBE 4"-60"LG PVC
3	1	8043172 BOOM HANDLE WELDMENT
4	2	8043947 PIN, BOOM HANDLE CAPTURE
5	8	U120020 NUT, LOCK NY, 5/8-11 ZP G2
6	16	U200140 WASHER, FLAT 5/8 ZP
7	2	8041938 GASKET, FLANGE 4"
8	1	8041937 FLANGE, 4" PVC
9	1	8046638 BOOM HOSE MOUNT PLATE WELDMENT
10	8	U001250 SCREW,HC 5/8-11 X 3.00 ZP G5
11	1	8046769 HOSE VAC AG SUCTION 4"-42"LG
12	1	8046444 CAMLOCK 4" AL FCAM X MBARB
13	2	8042606 HOSE CLAMP T-BOLT 4"
14	4	U000900 SCREW,HC 1/2-13 X 2.50 ZP G5
15	8	U200100 WASHER
16	4	U160018 NUT, LOCK 1/2-13 NY ZP
17	1	8046612 BOOM PIVOT END WELDMENT
18	1	8046603 BOOM PIVOT END #1
19	1	8046606 BOOM PIVOT END #2
20	2	U000635 SCREW,HC 3/8-16 X 6.5 ZP GR5
21	4	8046636 BOLT, BOOM PIVOT END SPRING
22	1	8046771 SPRING, 3/8 X 5" 480LBs
23	2	U120110 NUT, LOCK 3/8-16 NY ZP
24	1	8046770 SPRING, 3/8 X 5" 395LBs
25	4	U120040 NUT, LOCK 3/4-10 NY ZP GR2
26	8	U200160 WASHER, FLAT 3/4 ZP

OPTIONS

BOOM ASSEMBLY
PIVOT ARM

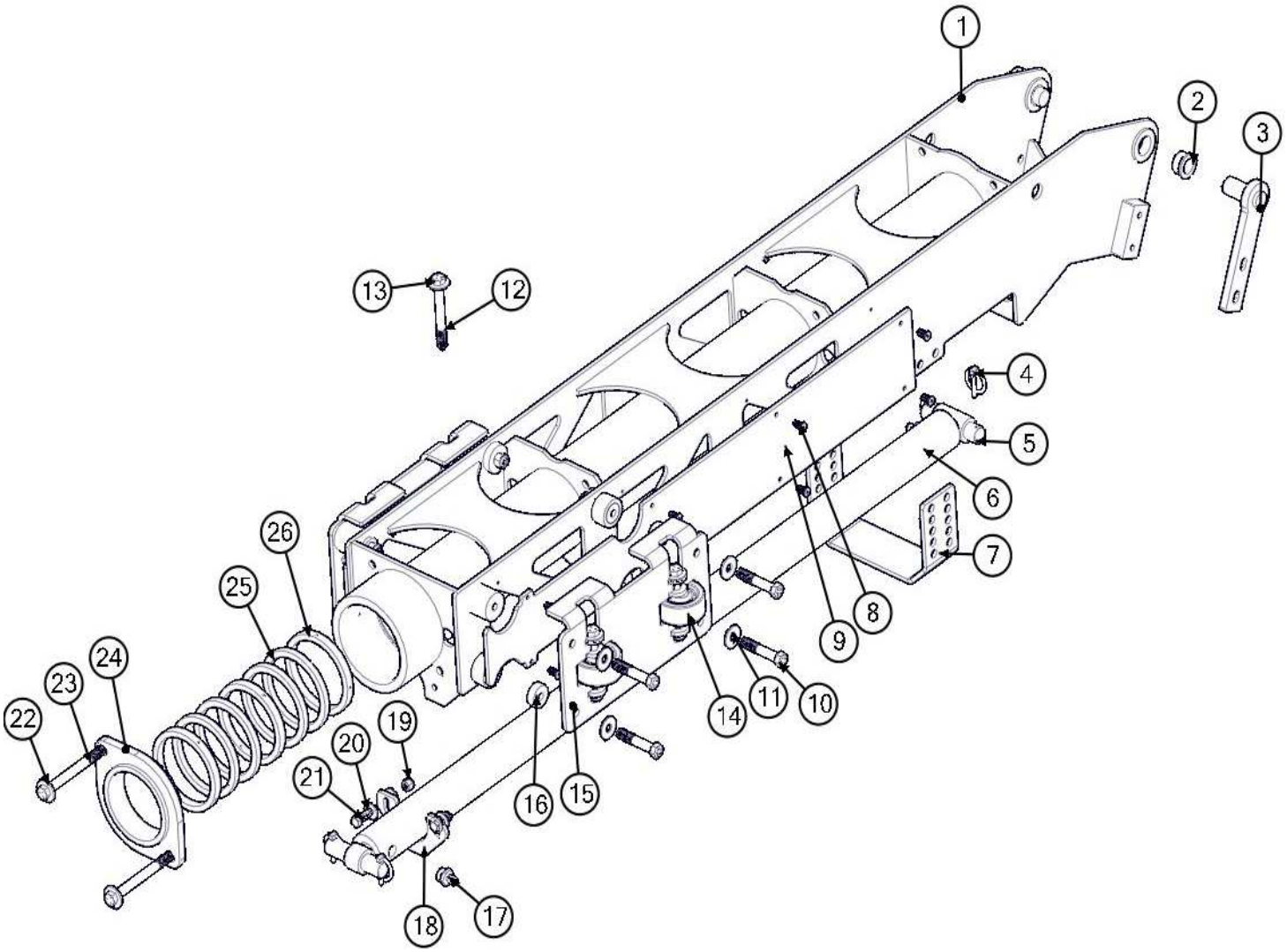

BOOM ASSEMBLY
PIVOT ARM

BOM ID	Qty	Name
1	1	8046582 BOOM PIVOT ARM LP
2	2	8041883 BUSHING, BRONZE 1 1/4 X 1 X .63 FL
3	2	8046634 PIN, BOOM PIVOT
4	4	U340050 PIN LINCH 3/16 X 1 9/16 ZP
5	2	8041990 BOOM PIVOT CYLINDER ROD PIN
6	1	8041926 BOOM-CYLINDER WX
7	1	8046635 BRACKET, BOOM CRADLE FOOT
8	16	U030015 SCREW,SFH 1/4-20 X .750 G5
9	2	8041986 GLIDE SHEET
10	8	U000935 SCREW,HC 1/2-13 X 3.00 ZP G8
11	8	U200100 WASHER, FLAT 1/2 ZP
12	4	U000980 SCREW,HC 1/2-13 X 4.50 ZP G5
13	4	U200100 WASHER, FLAT 1/2 ZP
14	4	8030226 WHEEL, PLASTIC FLUIDSWEEPER
15	2	8046627 BOOM EXT. ARM CAPTURE LP
16	4	8046624 BOOM CAM ROLLER SPACER
17	2	T400611 REDUCER, 8MB-4MJ
18	1	8041956 BOOM PIVOT ARM CYL. RETURN PLATE
19	2	U120110 NUT, LOCK 3/8-16 NY ZP
20	4	U200060 WASHER, FLAT 3/8 ZP
21	2	U000440 SCREW,HC 3/8-16 X 1.25 ZP G5
22	2	U200100 WASHER, FLAT 1/2 ZP
23	2	U001020 SCREW,HC 1/2-13 X 5.50 ZP G5
24	1	8041963 BOOM PACKING GLAND
25	4	8041947 BOOM PACKING RING
26	3	8041945 SLEEVE, PLASTIC BOOM SEAL

OPTIONS

BOOM ASSEMBLY
TURRET HYD ROTATION

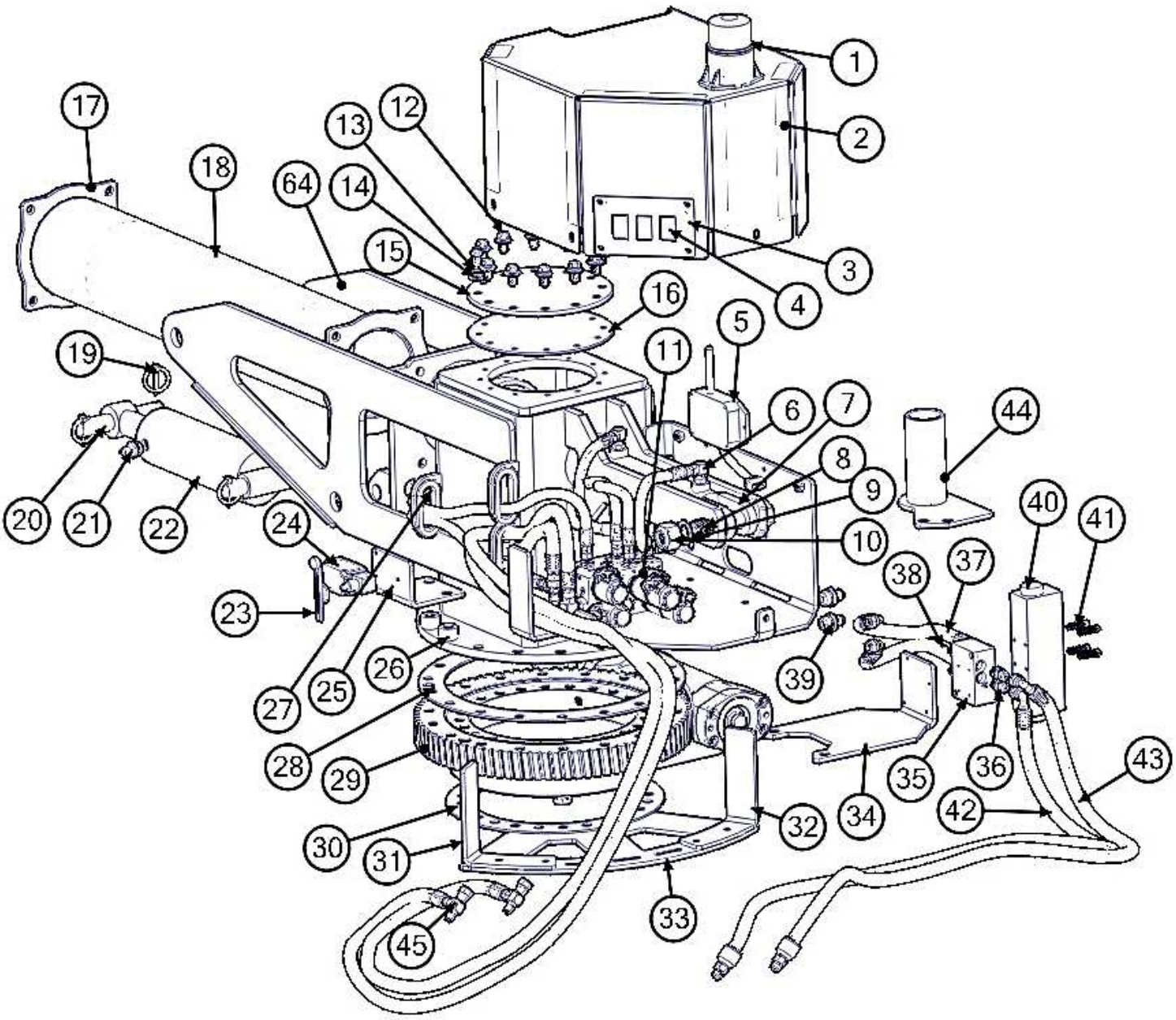

OPTIONS

BOOM ASSEMBLY
TURRET HYD ROTATION

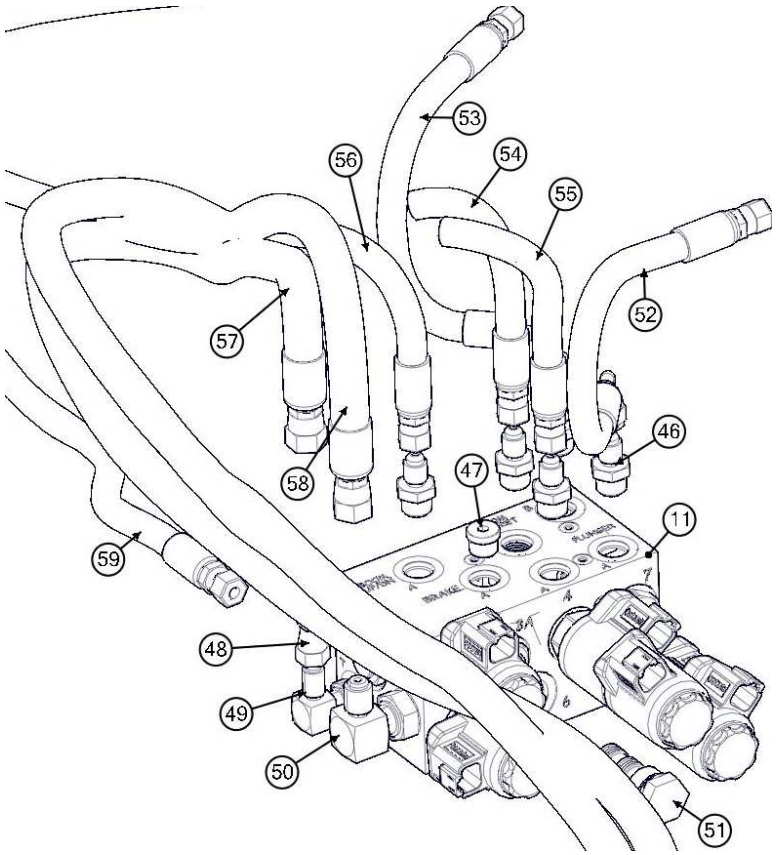

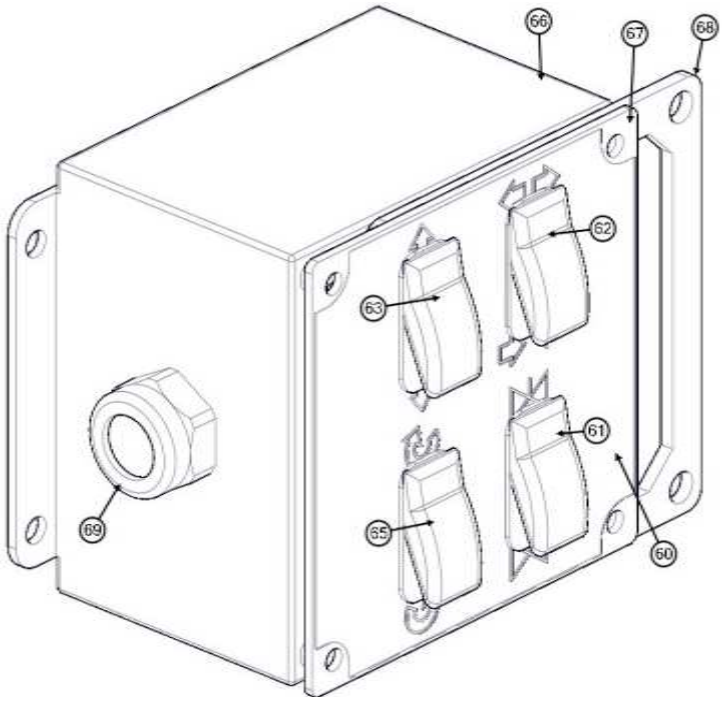

OPTIONS

BOOM ASSEMBLY
TURRET HYD ROTATION

BOM ID	Qty	Name
1	1	8043139 STROBE LIGHT DEUTSCH
2	1	8046644 COVER, BOOM LOW PROFILE
3	1	8046696 CONTROL PANEL BOOM OVERIDE
4	3	X000290 PLUG, ROCKER HOLE
5	1	8092806 RECEIVER, BOOM HR 100
6	2	T401660 ELBOW, 90 6MB 4MJ
7	1	8048198 CYLINDER, BOOM GATE VALVE
8	1	U001570 SCREW,HC 1-8 X 5.00 ZP
9	1	U200170 WASHER, FLAT 1.000
10	1	U120060 NUT, LOCK 1-8 NY ZP G2
11	1	8047331 MANIFOLD, BOOM UPPER ASSY
12	12	U000420 SCREW,HC 3/8-16 X 1.00 ZP G5
13	12	U210060 WASHER, LOCK 3/8 ZP
14	12	U200060 WASHER, FLAT 3/8 ZP
15	1	8044471 COVER. BOOM TURRET CLEANOUT
16	1	8044475 GASKET, BOOM TURRET CLEANOUT
17	2	8041958 BOOM FLEX HOSE ADAPTER WLDMT
18	1	8046758 BOOM HOSE 6-32 1/2"
19	4	U340050 PIN LINCH 3/16 X 1 9/16 ZP
20	2	8041977 BOOM PIVOT CYL BASE PIN
21	2	T400611 REDUCER, 8MB-4MJ
22	1	8046597 CYLINDER, HYD BOOM 3 X 6
23	1	8042432 LEVER, BOOM LIMIT SWITCH
24	1	8042431 SWITCH, LIMIT BOOM
25	1	8042360 BRACKET, BOOM LIMIT SWITCH
26	2	8042376 SPACER, LIMIT SWITCH BRACKET
27	3	8042812 GROMMET, 2"ID X 3"OD X 1/4"WOG
28	1	8043780 GASKET, BOOM BEARING (TOP)
29	1	8042231 BOOM BEARING HYD ROTATION
30	1	8043781 GASKET, BOOM BEARING (BOTTOM)
31	1	8042357 BOOM ROTATION STOP BRACKET
32	1	8042359 BOOM ROTATION STOP BRACKET OPP
33	1	8042351 BOOM ROTATION STOP BASE PLATE
34	1	8042344 BOOM HYD MANIFOLD MTG PLATE
35	1	8049329 MANIFOLD SUBPLATE D03 BOOM HR

BOM ID	Qty	Name
36	4	T400037 UNION 6MB 6MJ
37	1	8044997 HOSE ASSY VAC 6-13 ST-90
38	1	8044997 HOSE ASSY VAC 6-13 ST-90
39	2	T400035 REDUCER 10MB-6MJ
40	1	8049328 VALVE DIRECTIONAL BOOM HR D03
41	4	U010007 SCREW, HSH #10-24 X 1.25
42	1	8090246 HOSE ASSY VAC 6-48 ST-90
43	1	8090246 HOSE ASSY VAC 6-48 ST-90
44	1	8049418 HOSE ROUTING BRACKET WELDMENT
45	2	T402153 TEE 6FJ_6MJ_6MJ
46	5	T400550 REDUCER 6MB-4MJ
47	1	T405092 PLUG 6MB-HEX SOCKET HOLLOW
48	1	T402010 TEE 4FJ-4MJ-4MJ
49	1	T401660 ELBOW, 90 6MB_4MJ
50	1	T401250 ELBOW, 90 6MB_6MJ
51	1	8049370 PLUG, CAVITY #8 3-WAY
52	1	8047948 HOSE ASSY VAC 4-9 ST-90
53	1	8047949 HOSE ASSY VAC 4-11 ST-90
54	1	8049374 HOSE ASSY VAC 4-120 ST-90
55	1	8047951 HOSE ASSY VAC 4-95 ST-90
56	1	8047714 HOSE ASSY VAC 4-38 ST-90
57	1	8091929 HOSE ASSY VAC 6-140 ST(MJ)-ST
58	1	8091929 HOSE ASSY VAC 6-140 ST(MJ)-ST
59	1	8047714 HOSE ASSY VAC 4-38 ST-90
60	1	J200210 DECAL, REMOTE BOOM CONTROL HYD. ROT.
61	1	X000273 SWITCH, ROCKER (GATE VALVE)
62	1	X000274 SWITCH, ROCKER (EXT/RETRACT)
63	1	X000274 SWITCH, ROCKER (UP/DOWN)
64	1	8048371 BOOM TURRET HYD ROTATION
65	1	X000274 SWITCH, ROCKER (ROTATE)
66	1	8092698 BOX, BOOM CONTROLS
67	1	8092677 PLATE, COVER
68	1	8092678 GASKET, CONTROL BOX
69	1	X000154 CONNECTOR, STRAIN RELIEF 1"

HARNESSES FOR HYDRAULIC ROT. BOOM

X200129 HARNESS BOOM
X200130 HARNESS BOOM INTERMEDIATE
X200132 HARNESS BOOM SWITCH BOX

OPTIONS

BOOM ASSEMBLY
TURRET MANUAL ROTATION

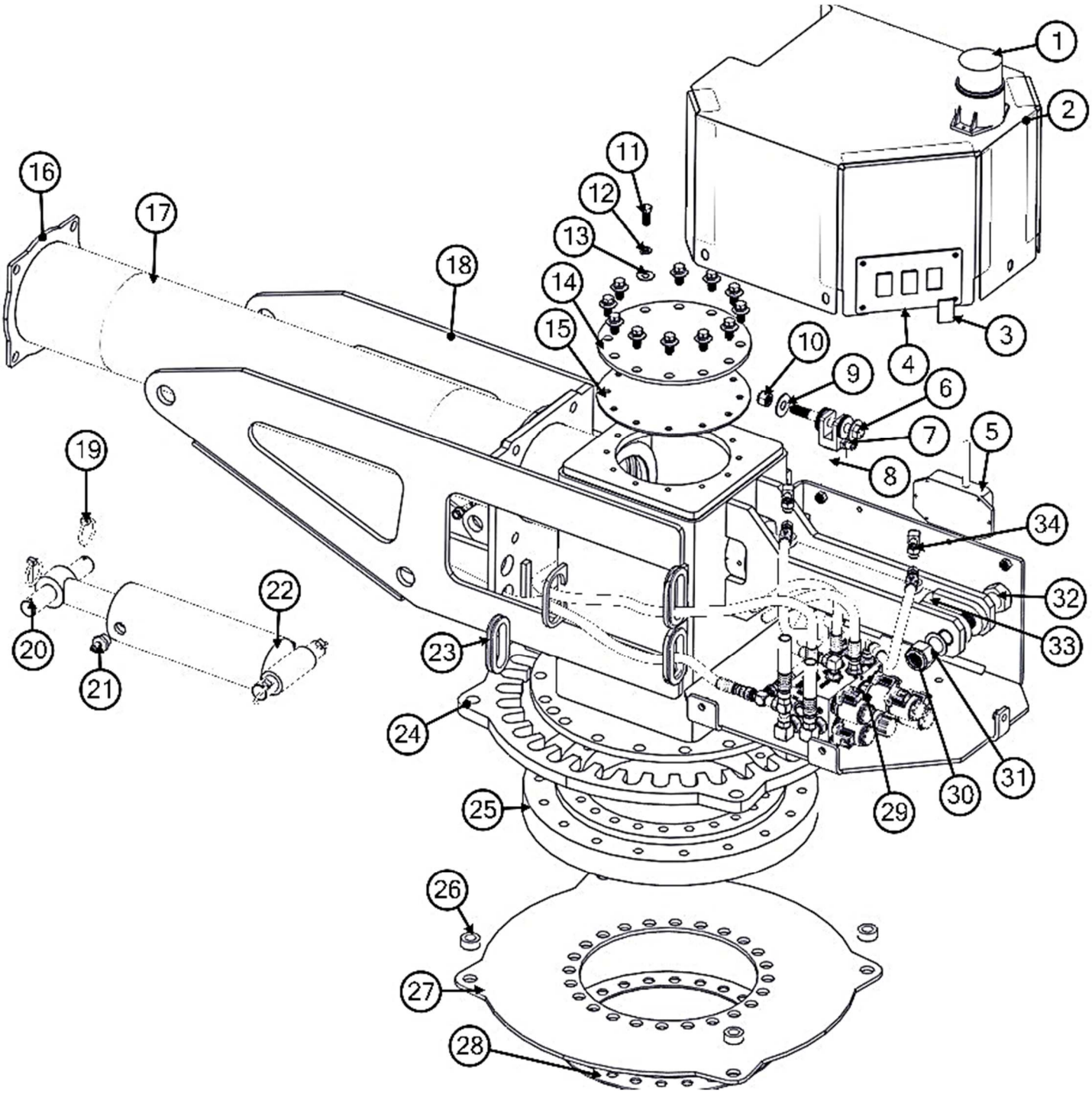

OPTIONS

BOOM ASSEMBLY
TURRET MANUAL ROTATION

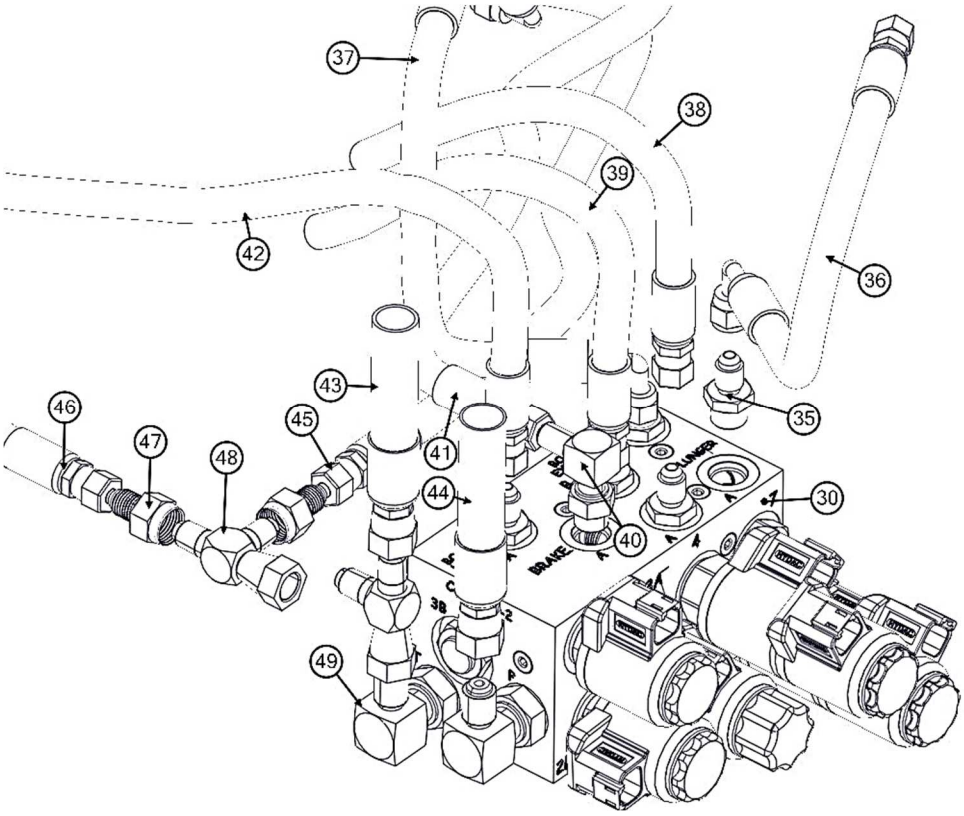

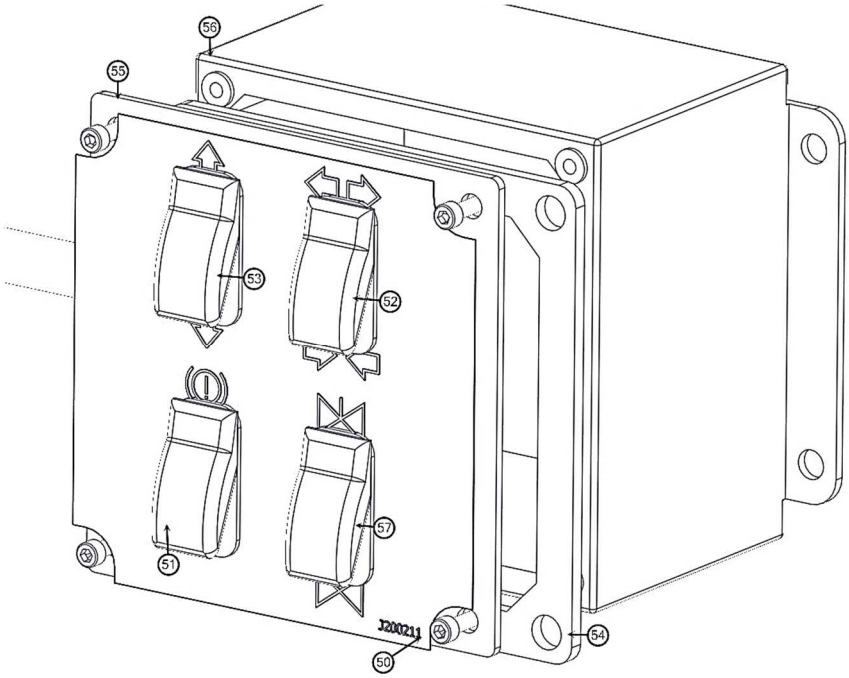

OPTIONS

BOOM ASSEMBLY
TURRET MANUAL ROTATION

BOM ID	Qty	Name
1	1	8043139 STROBE LIGHT DEUTSCH
2	1	8046644 BOOM COVER WELDMENT
3	3	X000290 PLUG, ROCKER HOLE
4	1	8046696 PANEL CONTROL BOOM OVERRIDE
5	1	8092804 RECEIVER BOOM MANUAL 100
6	1	U000980 SCREW,HC .500-13X4.50 ZP G5 U000980
7	2	T400570 UNION 4MB-4MJ
8	1	8043052 CYLINDER, BOOM BRAKE
9	8	U200100 WASHER, FLAT 1/2 ZP
10	1	U160018 NUT, LOCK 1/2-13 NY ZP
11	12	U000420 SCREW,HC 3/8-16 X 1.00
12	12	U210060 WASHER, LOCK 3/8 ZP
13	12	U200060 WASHER, FLAT 3/8 ZP
14	1	8044471 COVER, CLEANOUT BOOM TURRET
15	1	8044475 GASKET, BOOM TURRET CLEANOUT
16	2	8041958 BOOM FLEX HOSE ADAPTER WELDMENT
17	1	8042103 HOSE AG SUCTION 6-32 1/2"
18	1	8046571 BOOM TURRET LOW PROFILE
19	4	U340050 PIN LINCH 3/16 X 1 9/16"
20	2	8041977 BOOM PIVOT CYLINDER BASE PIN
21	2	T400611 REDUCER, 8MB-4MJ
22	1	8046597 CYLINDER, HYD BOOM 3 X 6
23	5	8042812 GROMMET 2"ID 3"OD 1/4"WOG
24	1	8046688 BRACKET BOOM MNT BRAKE RING
25	1	8042234 SWIVEL BEARING
27	4	8030315 SKID-WATER TANK CLEVIS TUBE
28	1	8046690 BRACKET BOOM LWR STOP RING
29	1	8043781 GASKET, BOOMBRG BOT SMALL 13.5"
30	1	8047331 MANIFOLD ASSY BOOM (UPPER)

BOM ID	Qty	Name
31	1	U120060 NUT, LOCK 1-8 NY ZP G2
32	2	U200170 WASHER, FLAT 1.000
33	1	U001570 SCREW,HC 1-8 X 5.00 ZP
34	1	8048198 CYLINDER, HYD 2" X 8"
35	4	T400550 REDUCER 6MB-4MJ
36	1	8047948 HOSE ASSY VAC 4-9" ST-90
37	1	8047949 HOSE ASSY VAC 4-11" ST-90
38	1	8047951 HOSE ASSY VAC 4-95" ST-90
39	1	8049374 HOSE ASSY VAC 4-120" ST-90
40	1	T401660 ELBOW, 90 6MB-4MJ
41	1	8044745 HOSE ASSY VAC 4-20" ST-90
42	1	8047714 HOSE ASSY VAC 4-38" ST-90
43	1	8049287 HOSE ASSY VAC 6-50" ST-90
44	1	8049287 HOSE ASSY VAC 6-50" ST-90
45	1	8044745 HOSE ASSY VAC 4-20" ST-90
46	1	8047714 HOSE ASSY VAC 4-38" ST-90
47	2	T400022 REDUCER 6FJ-4MJ
48	2	T402153 TEE 6FJ-6MJ-6MJ
49	2	T401250 ELBOW, 90 6MB-6MJ
50	1	J200211 DECAL, REMOTE BOOM CONTROL MANUAL ROT.
51	1	X000274 SWITCH, ROCKER (BRAKE)
52	1	X000274 SWITCH, ROCKER (EXTEND/RETRACT)
53	1	X000274 SWITCH, ROCKER (UP/DOWN)
54	1	8092678 GASKET, BOOM CONTROL BOX
55	1	8092677 COVER PLATE
56	1	8092698 BOX, BOOM CONTROLS
57	1	X000271 SWITCH, ROCKER (GATE VALVE)

HARNESSES FOR BOOM MANUAL ROTATION

X200129 HARNESS BOOM
X200130 HARNESS BOOM INTERMEDIATE
X200132 HARNESS BOOM SWITCH BOX

OPTIONS

BOOM ASSEMBLY TOOLS

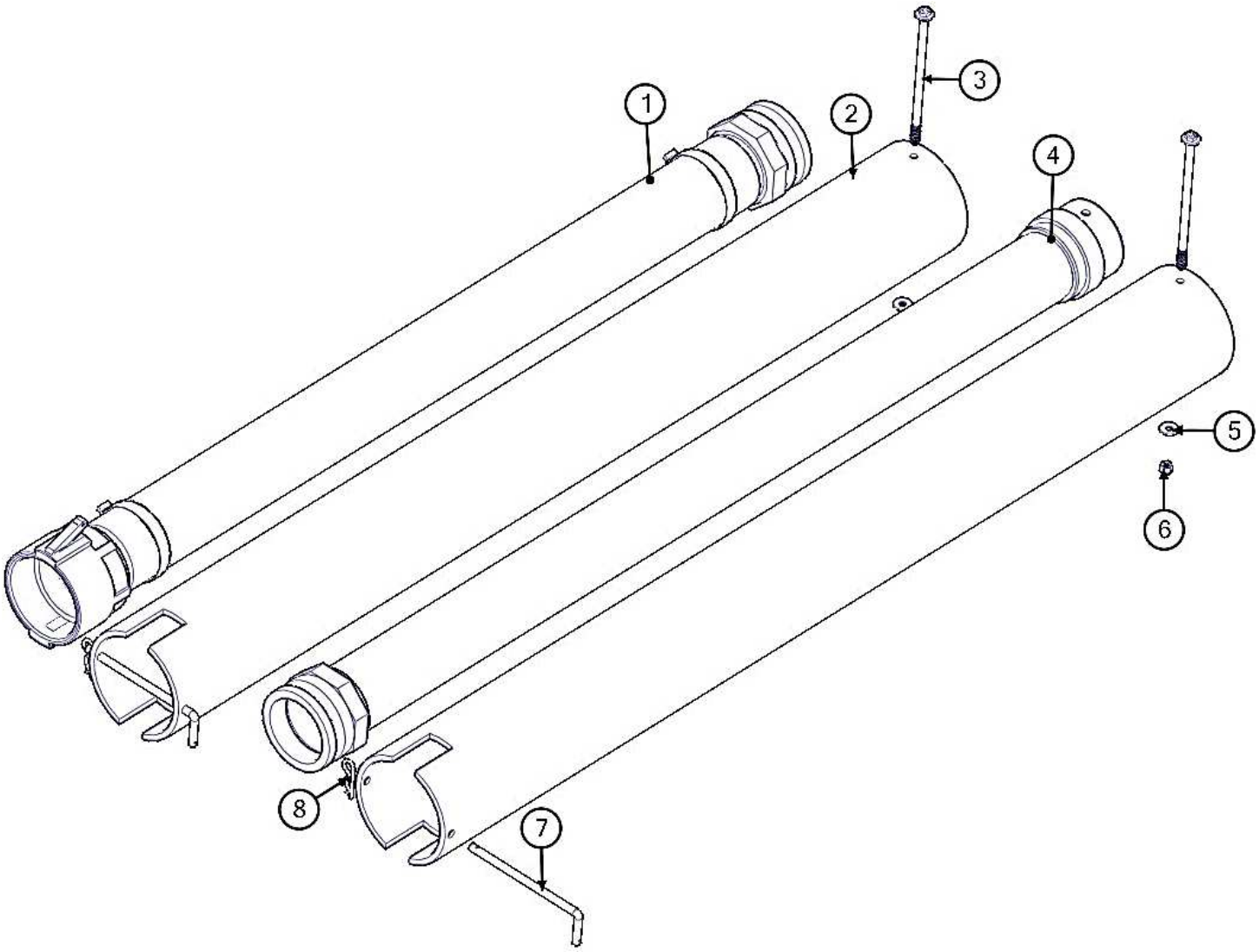

BOOM ASSEMBLY TOOLS

BOM ID	Qty	Name
1	1	8042137 BOOM HOSE EXTENSION
2	2	8042222 BOOM EXTENSION HOSE STORAGE
3	2	U000681 SCREW,HC 3/8-16 X 9.00
4	1	8042138 BOOM HOSE EXT. w_ 4in UNION PVC (5FT)
5	4	U200060 WASHER, FLAT 3/8 ZP
6	2	U120110 NUT, LOCK 3/8-16 NY ZP
7	2	8041101 HOSE STORAGE RETAINING ROD
8	2	R700160 R-CLIP

BOOM ASSEMBLY
REMOTES

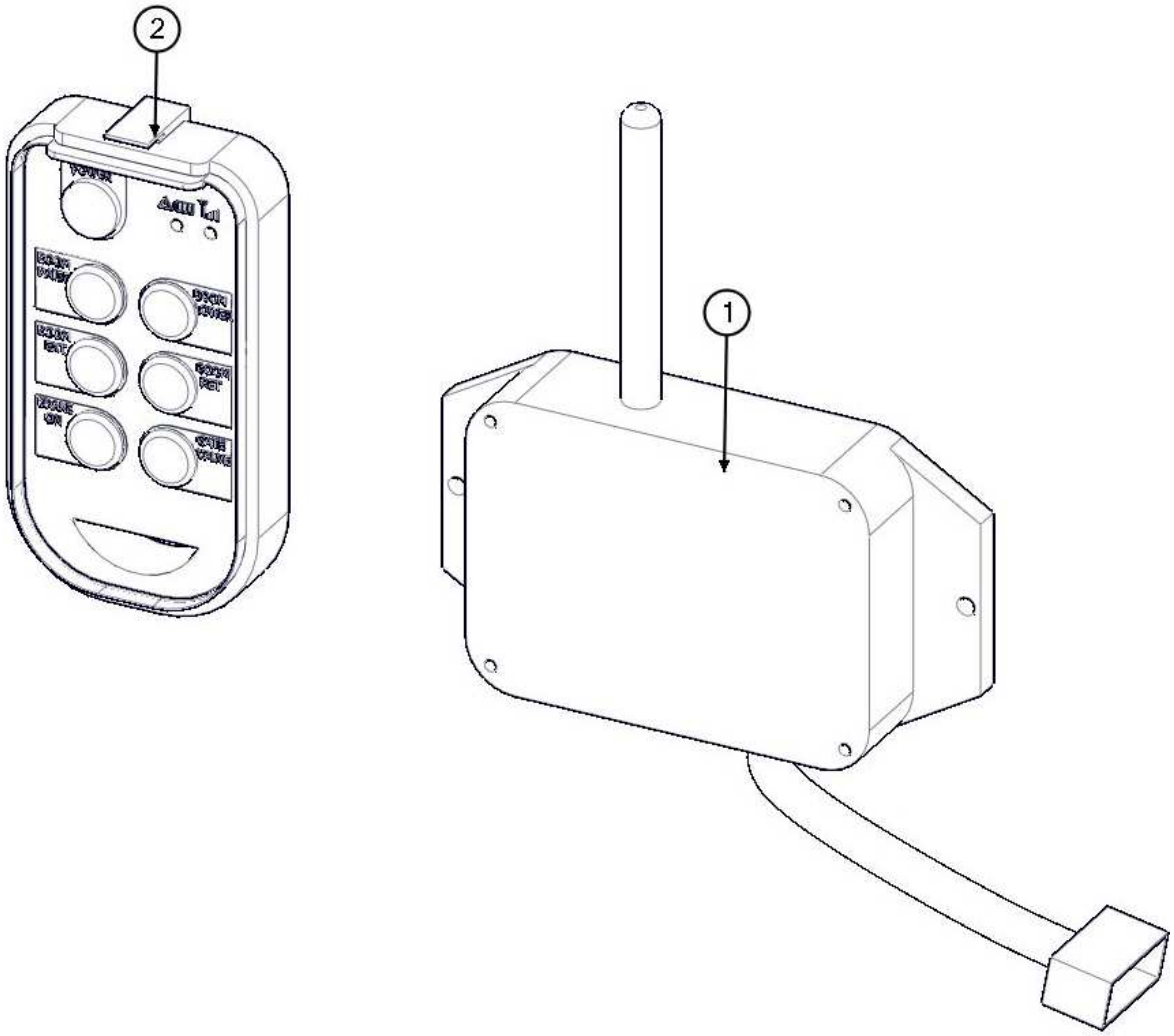

BOM ID	Qty	Name
1	1	8092804 RECEIVER, BOOM MANUAL
2	1	8092803 REMOTE CONTROL BOOM MANUAL

BOOM ASSEMBLY
REMOTES

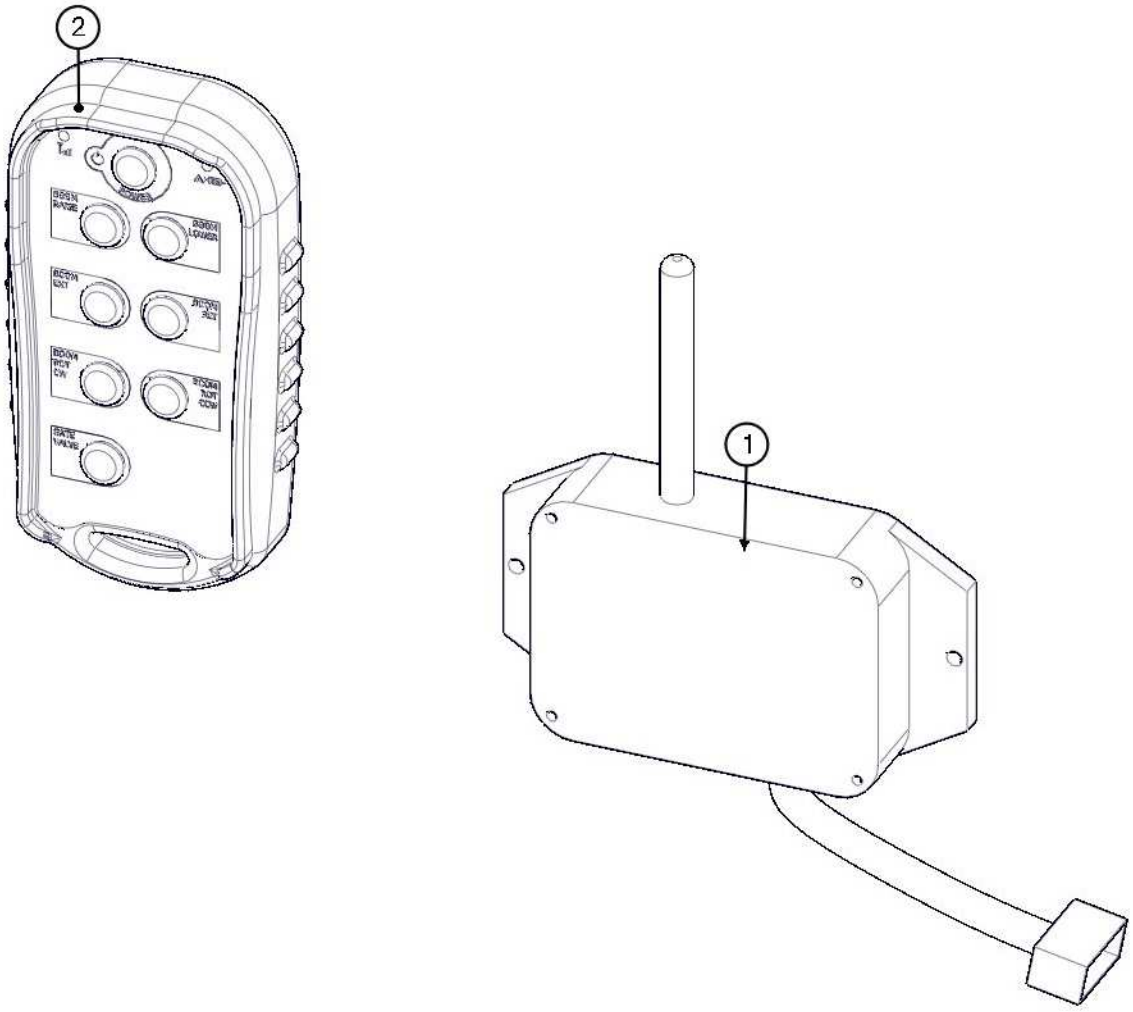

BOM ID	Qty	Name
1	1	8092806 RECEIVER HYD. ROT. BOOM
2	1	8092805 REMOTE CONTROL BOOM HYD ROTATION

PAGE LEFT BLANK

INSTALLATION OPERATION MAINTENANCE

ROOTS Blowers Compressors Exhausters

Universal URAI-DSL

Contents

Information Summary
Safety Precautions
Operating Limitations
Lubrication
Operatioin
Troubleshooting
Inspection & Maintenance
Data
Assembly Drawings
Parts List

Do These Things To Get The Most From Your ROOTS™ blower

- **Make sure both driving and driven equipment is correctly lubricated before start-up. See LUBRICATION.**
- In event of trouble during installation or operation, do not attempt repairs of ROOTS furnished equipment. Notify ROOTS, giving all nameplate information plus an outline of operating conditions and a description of the trouble. Unauthorized attempts at equipment repair may void ROOTS warranty.
- Units out of warranty may be repaired or adjusted by the owner. Good inspection and maintenance practices should reduce the needs for repairs.

NOTE: Information in this manual is correct as of the date of publication. ROOTS reserves the right to make design or material changes without notice, and without obligation to make similar changes without notice, and without obligation to make similar changes on equipment of prior manufacture.

DRESSER Roots

For Units with Splash Lubrication on Both Ends

Bearings and oil seals are lubricated by the action of the timing gears or oil slingers which dip into the main oil sumps

causing oil to splash directly on gears and into bearings and seals. A drain port is provided below each bearing to prevent an excessive amount of oil in the bearings. Seals located inboard of the bearings in each headplate effectively retain oil within the sumps. Any small leakage that may occur should the seals wear passes into a cavity in each vented headplate and is drained downward.

Oil sumps on each end of the blower are filled by removing top vent plugs, Item (25), and filling until oil reaches the middle of the oil level sight gauge when the unit is not operating, Item (45 or 53), DO NOT FILL PAST THE MIDDLE OF THE SIGHT GLASS.

Initial filling of the sumps should be accomplished with the blower not operating, in order to obtain the correct oil level. Approximate oil quantities required for blowers of the various models and configurations are listed in Table 3. Use a good grade of industrial type non-detergent, rust inhibiting, anti-foaming oil and of correct viscosity per Table 2. ***ROOTS synthetic oil (Roots P/N 813-106-) is specified and recommended.** Roots does not recommend automotive type lubricants, as they are not formulated with the properties mentioned above.

The oil level may rise or fall on the gauge during operation, to an extent depending somewhat on oil temperature and blower speed.

Proper lubrication is usually the most important single consideration in obtaining maximum service life and satisfactory operation from the unit. Unless operating conditions are quite severe, a weekly check of oil level and necessary addition of lubricant should be sufficient. During the first week of operation, check the oil levels in the oil sumps about once a day, and watch for leaks. Replenish as necessary. Thereafter, an occasional check should be sufficient. It is recommended that the oil be changed after initial 100 hours of operation. Frequent oil changing is not necessary unless the blower is operated in a very dusty location.

Normal life expectancy of petroleum based oils is about 2000 hours with an oil temperature of about 180°F (82°C). As the oil temperature increases by increments of 15-18°F (8°C - 10°C), the life is reduced by half. Example: Oil temperatures of 210-216°F (99°C - 102°C) will produce life expectancy of 1/4 or 500 hours. Therefore, it is considered normal to have oil change periods of 500 hours with petroleum based oils.

Normal life expectancy of ROOTS™ Synthetic Oil is about 4000 to 8000 hours with an oil temperature of about 180°F (82°C). As the oil temperature increases by increments of 15-18°F (8°C - 10°C), the life is reduced by half. Example: Oil temperatures of 210-216°F (99°C - 102°C) will produce life expectancy of 1/4 or 1000 to 2000 hours.

NOTE: To estimate oil temperature, multiply the discharge temperature of the blower by 0.80. Example: if the discharge air temperature of the blower is 200° F, it is estimated that the oil temperature is 160° F.

*ROOTS™ Synthetic Oil & Grease is superior in performance to petroleum based products. It has high oxidation stability, excellent corrosion protection, extremely high film strength and low coefficient of friction. Typical oil change intervals are increased 2-3 times over petroleum based lubricants. Also, ROOTS™ Synthetic Oil is 100% compatible with petroleum based oils. Simply drain the oil in the blower and refill the reservoirs with ROOTS™ Synthetic Oil to maintain optimum performance of your ROOTS™ blower.

Operation

Before operating a blower under power for the first time, recheck the unit and the installation thoroughly to reduce the likelihood of avoidable troubles. Use the following procedure check list as a guide, but consider any other special conditions in the installation.

- ❑ Be certain that no bolts, tools, rags, or debris have been left in the blower air chamber or piping.
- ❑ If an outdoor intake without filter is used, be sure the opening is located so it cannot pick up dirt and is protected by a strong screen or grille. Use of the temporary protective screen as described under INSTALLATION is strongly recommended.
- ❑ Recheck blower leveling, drive alignment and tightness of all mounting bolts if installation is not recent. If belt drive is used, adjust belt tension correctly.
- ❑ Turn drive shaft by hand to make sure impellers still rotate without bumping or rubbing at any point.
- ❑ Ensure oil levels in the main oil sumps are correct.
- ❑ Check lubrication of driver. If it is an electric motor, be sure that power is available and that electrical overload devices are installed and workable.
- ❑ Open the manual unloading valve in the discharge air line. If a valve is in the inlet piping, be sure it is open.
- ❑ Bump blower a few revolutions with driver to check that direction of rotation agrees with arrow near blower shaft, and that both coast freely to a stop.

After the preceding points are cleared, blower is ready for trial operation under "no-load" conditions. The following procedure is suggested to cover this initial operation test period.

a. Start blower, let it accelerate to full speed, then shut off. Listen for knocking sounds, both with power on and as speed slows down.

b. After blower comes to a complete stop, repeat above, but let blower run 2 or 3 minutes. Check for noises, such as knocking sounds.

c. After blower comes to a complete stop, operate blower for about 10 minutes unloaded. Check oil levels. Observe cylinder and headplate surfaces for development of hot spots such as burned paint, indicating impeller rubs. Be aware of any noticeable increase in vibration.

Assuming that all trials have been satisfactory, or that necessary corrections have been made, the blower should now have a final check run of at least one hour under normal operating conditions. After blower is restarted, gradually close the discharge unloading valve to apply working pressure. At this point it is recommended that a pressure gauge or manometer be connected into the discharge line if not already provided, and that thermometers be in both inlet and discharge lines. Readings from these instruments will show whether pressure or temperature ratings of the blower are being exceeded.

During the final run, check operating conditions frequently and observe the oil levels at reasonable intervals. If excessive noise or local heating develops, shut down immediately and determine the cause. If either pressure rise or temperature rise across the blower exceeds the limit specified in this manual, shut down and investigate conditions in the piping system. Refer to the TROUBLESHOOTING CHECKLIST for suggestions on various problems that may appear.

The blower should now be ready for continuous duty operation at full load. During the first few days make periodic checks to determine whether all conditions remain steady, or at least acceptable. This may be particularly important if the blower is supplying air to a process system where conditions can vary. At the first opportunity, stop the blower and clean the temporary inlet protective screen. If no appreciable amount of debris has collected, the screen may be removed. See comments under INSTALLATION. At this same time, verify leveling, coupling alignment or belt tension, and mounting bolt tightness.

Should operating experience prove that blower capacity is a little too high for the actual air requirements, a small excess may be blown off continuously through the manual unloading or vent valve. Never rely on the pressure relief valve as an automatic vent. Such use may cause the discharge pressure to become excessive, and can also result in failure of the valve itself. If blower capacity appears to be too low, refer to the TROUBLESHOOTING CHECKLIST.

Vibration Assessment Criteria

With measurements taken at the bearing locations on the housings, see chart below for an appropriate assessment guide for rotary lobe blowers rigidly mounted on stiff foundations.

In general, blower vibration levels should be monitored on a regular basis and the vibration trend observed for progressive or sudden change in level. If such a change occurs, the cause should be determined through spectral analysis.

As shown on the chart below, the level of all pass vibration will determine the need to measure discrete frequency vibration levels and the action required.

All Pass Vibration (in/sec)	Discrete Frequency Vibration (in/sec)	Action
0.45 or less	N/R	Acceptable
Greater than 0.45 but 1.0 or less	0.45 or less @ any frequency	Acceptable
	Greater than 0.45 @ any frequency	Investigate
Greater than 1.0	Less than 1.0	Investigate
	Greater than 1.0	Investigate

Troubleshooting Checklist

Trouble	Item	Possible Cause	Remedy
No flow	1	Speed too low	Check by tachometer and compare with published performance
	2	Wrong rotation	Compare actual rotation with Figure 1 Change driver if wrong
	3	Obstruction in piping	Check piping, valves, silencer to assure open flow path
Low capacity	4	Speed too low	See item 1, If belt drive, check for slippage and readjust tension
	5	Excessive pressure rise	Check inlet vacuum and discharge pressure and compare with Published performance
	6	Obstruction in piping	See item 3
	7	Excessive slip	Check inside of casing for worn or eroded surfaces causing excessive clearances
Excessive power	8	Speed too high	Check speed and compare with published performance
	9	Excessive pressure rise	See item 5
	10	Impeller rubbing	Inspect outside of cylinder for high temperature areas, then check for impeller contact at these points. Correct blower mounting, drive alignment
	11	Scale, sludge, rust or product build up	Clean blower appropriately
Damage to bearings	12	Inadequate lubrication	Check oil sump levels in gear and drive end headplates
or gears	13	Excessive lubrication	Check oil levels. If correct, drain and refill with clean oil of recommended grade
	14	Excessive pressure rise	See item 5
	15	Coupling misalignment	Check carefully. Realign if questionable
	16	Excessive belt tension	Readjust for correct tension
Vibration	17	Misalignment	See item 15
	18	Impellers rubbing	See item 10
	19	Worn bearings/gears	Check gear backlash and condition of bearings, and replace as indicated
	20	Unbalanced or rubbing impeller	Scale or process material may build up on casing and impellers, or inside impellers. Remove build-up to restore original clearances and impeller balance
	21	Driver or blower loose	Tighten mounting bolts securely
	22	Piping resonances	Determine whether standing wave pressure pulsations are present in the piping
	23	Scale/sludge build-ups	Clean out interior of impeller lobes to restore dynamic balance
	24	Casing strain	Re-work piping alignment to remove excess strain
Driver stops, or will not start	25	Impeller stuck	Check for excessive hot spot on headplate or cylinder. See item 10. Look for defective shaft bearing and/or gear teeth
	26	Scale, sludge, rust or product build-up	Clean blower appropriately
Excessive breather	27	Broken seal	Replace seals
Blow-by or excessive oil leakage to vent area	28	Defective O-ring	Replace seals and O-ring
Excessive oil leakage in vent area	29	Defective/plugged breather	Replace breather and monitor oil leakage
	30	Oil level too high	Check sump levels in gear and drive headplates.
	31	Oil type or viscosity incorrect	Check oil to insure it meets recommendations. Drain then fill with clean oil of recommended grade.
	32	Blower running hot	Check blower operating conditions to ensure they are within the operating limitations defined in this manual.

Inspection & Maintenance: Universal RAI® series blowers

A good program of consistent inspection and maintenance is the most reliable method of minimizing repairs to a blower. A simple record of services and dates will help keep this work on a regular schedule. Basic service needs are:

- Lubrication
- Checking for hot spots
- Checking for increases or changes in vibration and noise
- Recording of operating pressures and temperatures

Above all, a blower must be operated within its specified rating limits, to obtain satisfactory service life.

A newly installed blower should be checked often during the first month of full-time operation. Attention there after may be less frequent assuming satisfactory performance. Lubrication is normally the most important consideration and weekly checks of lubricant levels in the gearbox and bearing reservoirs should be customary. Complete oil change schedules are discussed under **LUBRICATION.**

Driver lubrication practices should be in accordance with the manufacturer's instructions. If direct connected to the blower through a lubricated type coupling, the coupling should be checked and greased each time blower oil is changed. This will help reduce wear and prevent unnecessary vibration. In a belted drive system, check belt tension periodically and inspect for frayed or cracked belts.

In a new, and properly installed, unit there is no contact between the two impellers, or between the impellers and cylinder or headplates. Wear is confined to the bearings (which support and locate the shafts) the oil seals, and the timing gears. All are lubricated and wear should be minimal if clean oil of the correct grade is always used. Seals are subject to deterioration as well as wear, and may require replacement at varying periods.

Shaft bearings are designed for optimum life under average conditions with proper lubrication and are critical to the service life of the blower. Gradual bearing wear may allow a shaft position to change slightly, until rubbing develops between impeller and casing. This will cause spot heating, which can be detected by observing these surfaces. Sudden bearing failure is usually more serious. Since the shaft and impeller are no longer supported and properly located, extensive general damage to the blower casing and gears is likely to occur.

Oil seals should be considered expendable items, to be replaced whenever drainage from the headplate vent cavity becomes excessive or when the blower is disassembled for any reason. Some oil seal leakage may occur since an oil film under the lip is required for proper operation. Periodically leaked oil should be wiped off from surfaces. Minor seal leakage should not be considered as indicating seal replacement.

Timing gear wear, when correct lubrication is maintained, should be negligible. Gear teeth are cut to provide the correct amount of backlash, and gears correctly mounted on the shafts will accommodate a normal amount of tooth wear without permitting contact between lobes of the two impellers. However, too high an oil level will cause churning and excessive heating. This is indicated by unusually high temperature at the bottom of the gear housing. Consequent heating of the gears will result in loss of tooth-clearance , backlash and rapid wear of the gear teeth usually will develop. Continuation of this tooth wear will eventually produce impeller contacts (knocking), and from this point serious damage will be unavoidable if blower operation is continued. A similar situation can be produced suddenly by gear tooth fracture, which is usually brought on by sustained overloading or momentary shock loads.

Problems may also develop from causes other than internal parts failure. Operating clearances within a blower are only a few thousandths of an inch. This makes it possible for impeller interference or casing rubs to result from shifts in the blower mounting, or from changes in piping support. If this type of trouble is experienced, and the blower is found to be clean, try removing mounting strains. Loosen blower mounting bolts and reset the leveling and drive alignment. Then tighten mounting again, and make sure that all piping meets blower connections accurately and squarely Foreign materials in the blower will also cause trouble, which can only be cured by disconnecting the piping and thoroughly cleaning the blower interior.

A wide range of causes & solutions for operating troubles are covered in the **TROUBLE SHOOTING CHECKLIST.** The remedies suggested should be performed by qualified mechanics with a good background. Major repairs generally are to be considered beyond the scope of maintenance, and should be referred to an authorized Roots distributor.

Warranty failures should not be repaired at all, unless specific approval has been obtained through Roots before starting work. Unauthorized disassembly within the warranty period may void the warranty.

Figure 2 - Allowable Overhung Loads for V-Belt Drives Universal RAI®/URAI®-DSL Units

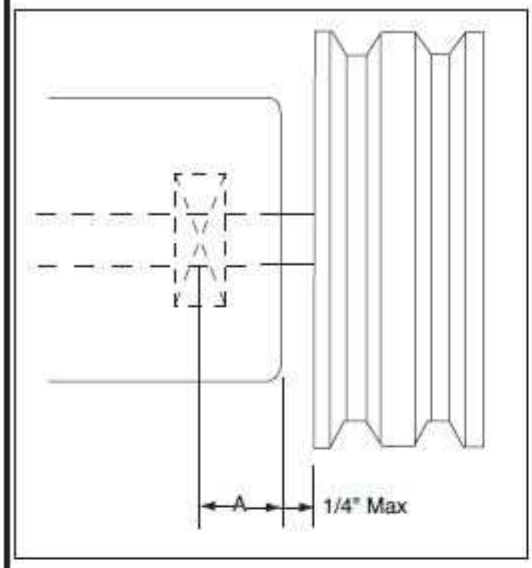

$$\text{Belt Pull lbs} = \frac{252100 \bullet \text{Motor HP}}{\text{Blower RPM} \bullet \text{Sheave Diameter}}$$

$$\text{Shaft Load (lb.in)} = \text{Belt Pull} \bullet \left(A + 1/4" + \frac{\text{Sheave Width}}{2}\right)$$

Frame Size	Dimension "A"	Max Allowable Shaft Load (lb-in)	Min Sheave Diameter
59	1.13	1,325	6.00

NOTE:
Arc of sheave belt contact on the smaller sheave not to be less than 170°
Driver to be installed on the inlet side for vertical units, and on the drive shaft side for horizontal units.
Roots recommends the use of two or more 3V, 5V or 8V matched set or banded belts and sheaves.

Specified Lubricants

ROOTS Synthetic Oil:	**ISO-VG-320 Grade**
	Part Number
Quart	13106004
Gallon	13106005
Case (12 qts)	13106007
ROOTS Synthetic Oil:	**ISO-VG-220 Grade**
	Part Number
Quart	13106001
Gallon	13106002
Case (12 qts)	13106008
ROOTS Synthetic Oil:	**ISO-VG-150 Grade**
	Part Number
Quart	13106020
Gallon	13106021
Case (12 qts)	13106023
5 Gallon Pail	13106022
55 Gallon Drum	13106025

Drive End Breather Orientation for URA-DSL blowers with Oil Lube

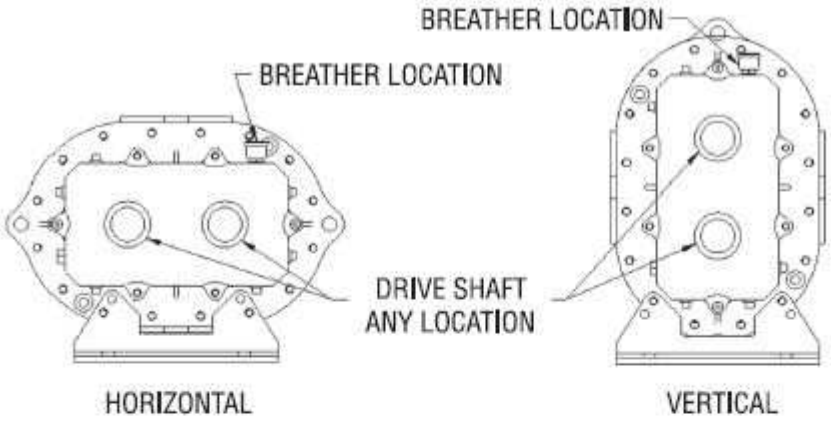

URAI DSL BREATHER ORIENTATION

Table 1 - URAI, URAI-DSL Blowers,
Maximum Allowable Operating Conditions

Frame Size	Gear Diameter (Inch)	Speed RPM	Temp. Rise Deg F (Deg C)	Delta Pressure PSI (mbar)	Inlet Vacuum INHG (mbar)
59	5	2,850	225 (125)	7 (483)	15 (500)

Table 2 - Recommended Oil Grades

Ambient Temperature °F (°C)	ISO Viscosity No.
Above 90° (32°)	320
32° to 90° (0° to 32°)	220
0° to 32° (-18° to 0°)	150
Below 0° (-18°)	100

Ambient temperature is defined as the temperature of the space in which the blower and drive are located.

Table 3 - Approximate Oil Sump Capacities

These capacities are provided to assist in stocking the correct amount of oil. Exact sump capacities may differ slightly. See "Lubrication" section for proper filling instructions.

URAI-DSL Splash Lubricated Blowers

Frame Size	Gear End Capacity Fl. Oz (Liters)	Drive End Capaicty Fl. Oz. (Liters)
59	27.6 (.82)	14.8 (.44)

Basic Connection & Drive Shaft Information

URAI DSL AIR BLOWERS (with Dual Splash Lubrication DSL)

BOM#	FRAME SIZE	INLET/DISCHARGE CONN.	SHAFT DIAMETER	BARE WEIGHT
T30361020	59	4" NPT	1.125	209

Universal RAI air blowers include detachable mounting feet which permit vertical or horizontal installation. The units are center timed for rotation in either direction. The bearings on the URAI are grease lubricated on the drive end and splash lubricated on the gear end. The URAI-DSL is splash lubricated on BOTH ends.

Table 2 - Recommended Oil Grades

Ambient Temperature °F (°C)	ISO Viscosity No.
Above 90° (32°)	320
32° to 90° (0° to 32°)	220
0° to 32° (-18° to 0°)	150
Below 0° (-18°)	100

Ambient temperature is defined as the temperature of the space in which the blower and drive are located.

Table 3 - Approximate Oil Sump Capacities

These capacities are provided to assist in stocking the correct amount of oil. Exact sump capacities may differ slightly. See "Lubrication" section for proper filling instructions.

URAI-DSL Splash Lubricated Blowers

Frame Size	Gear End Capacity Fl. Oz (Liters)	Drive End Capaicty Fl. Oz. (Liters)
59	27.6 (.82)	14.8 (.44)

Basic Connection & Drive Shaft Information

URAI DSL AIR BLOWERS (with Dual Splash Lubrication DSL)

BOM#	FRAME SIZE	INLET/DISCHARGE CONN.	SHAFT DIAMETER	BARE WEIGHT
T30361020	59	4" NPT	1.125	209

Universal RAI air blowers include detachable mounting feet which permit vertical or horizontal installation. The units are center timed for rotation in either direction. The bearings on the URAI are grease lubricated on the drive end and splash lubricated on the gear end. The URAI-DSL is splash lubricated on BOTH ends.

PAGE LEFT BLANK

WAYNE Combustion Systems
A Scott Fetzer Company

MODEL MSR-DC OIL BURNER

MODEL MSR-DC SPECIFICATIONS

FIRING CAPACITIES - MODEL MSR-DC

0.50 To 2.75 GALLONS PER HOUR

70,000 TO 385,000 BTU/HR INPUT

FUELS - MODEL MSR-DC

Use No. 1 or No. 2 Heating Oil (ASTM D-396), Kerosene, Diesel or Jp8 Jet Fuel.

NEVER attempt to use gasoline as a fuel for your burner, as it is more combustible and could result in a serious explosion.

NEVER burn garbage or refuse in the heating unit.

NEVER try to ignite by tossing burning paper or other materials into the heating unit.

NEVER burn waste or crankcase oil in the heating unit.

ELECTRICAL - MODEL MSR-DC

Power supply	13.0VDC Minimum (at Battery)
Motor	4500 RPM (Std) or 3950 RPM (low RPM), Ball Bearing, Permanent Magnet
Ignition	20,000V/28MA/50VA Secondary, Intermittent Duty Electronic Ignitor

DIMENSIONS - MSR-DC (Standard

Height	12½"
Width	13"
Depth	6¼"

FUEL UNIT

Suntec and DanFoss brands

MOUNTING

Rigid Flange, Adjustable Flange or Base mount.

DC OIL BURNER ELECTRICAL CONSIDERATIONS

* Not all generators are equally capable. A minimum of 13.0 volts must be provided at the battery.
* Generators should be operated at the maximum rated RPM during burner operation.
* Good quality batteries are strongly suggested. Batteries with higher Cold Cranking Amp (CCA) rating and deep draw/marine type batteries are recommended.
* Use automotive rated battery cabling. All other wiring should be OEM suggested wire type and gauge.
* Protect all wiring connection points with dielectric grease.
* Ambient temperature impacts electrical requirements. Higher temperatures will result in higher amp draws.
* Increased pump operating pressure settings will increase amp draw.
* Higher gallon rate nozzles and accompanying wider air band openings will increase amp draw.

INSTALLATION OF BURNER

INSTALLATION OF THE BURNER MUST BE DONE BY A QUALIFIED INSTALLER IN ACCORDANCE WITH REGULATIONS OF THE NATIONAL FIRE PROTECTION STANDARD FOR OIL-BURNING EQUIPMENT, NFPA NO. 31, AND IN COMPLETE ACCORDANCE WITH ALL LOCAL CODES AND AUTHORITIES HAVING JURISDICTION.

A QUALIFIED INSTALLER IS THE PERSON WHO IS RESPONSIBLE FOR THE INSTALLATION AND ADJUSTMENT OF THE EQUIPMENT AND WHO IS LICENSED TO INSTALL OIL-BURNING EQUIPMENT IN ACCORDANCE WITH ALL CODES AND ORDINANCES. WARRANTY IS VOIDED IF NOT INSTALLED BY SERVICE PERSON.

THESE INSTRUCTIONS SHOULD BE AFFIXED TO THE BURNER OR ADJACENT TO THE HEATING APPLIANCE.

TO THE CLEANING EQUIPMENT OWNER

Since 1970, Wayne has supplied the hot water pressure washer cleaning equipment industry with oil burners. You are obtaining a quality burner unsurpassed in engineering design and product development. It will provide you with many years of efficient trouble-free operation, if properly installed and serviced. Please read this manual carefully.

Wayne warrants its burners specifically to those who have purchased it for resale, including your dealer. If, in any case, you have a problem with your burner, or its installation, you should contact your dealer or the cleaning equipment manufacturer for assistance.

FUEL UNITS AND OIL LINES

The model MSR-DC oil burner is provided with a single stage 3450 RPM fuel unit with by-pass plug removed for a single pipe installation; the by-pass plug for two pipe (inlet and return) is provided in the plastic bag attached to the fuel unit.

The installation of fuel filters are recommended. Check supply tank for sludge accumulation and leakage. Use only flare fittings on all piping and connections since compression fittings will eventually leak. With the system running, the vacuum should not exceed 12" mercury for single stage units. For ease of servicing, install a shut off valve near burner.

WIRING

The MSR-DC oil burner must be electrically wired and GROUNDED in accordance with local codes or in their absence, with National Electric Code ANS/NFPA No. 70-latest edition.

This oil burner requires a 12-volt DC power source. Use copper wire only not lighter than #12 awg. If a fused disconnect is used, it should be fused for a minimum of 20 amps. Refer to the wiring diagram in this manual or cleaning equipment manufacturers manual making sure the burner and controls are wired correctly.

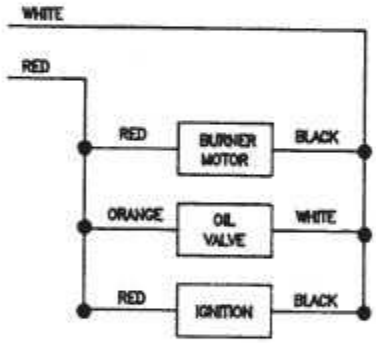

AIR SUPPLY FOR COMBUSTION

The oil burner fired hot water pressure washer shall not be installed in an area where facilities for normal air circulation or infiltration are so limited as to interfere with ready attainment of all necessary for proper combustion and venting. When the heating appliance is installed in a confined space, two permanent openings shall be provided. One near the top of the enclosure and one near the bottom. Each opening shall have a free area of not less than one square inch per 1000 BTU per hour (140 square inch per gph) of the total input rating of all the appliances in the enclosure. When the building is of unusually tight construction, has an air ventilating system, exhaust fans, process dryer or vented fireplaces, it is recommended that combustion air be supplied through two permanent openings. The openings shall communicate directly, or by means of ducts, with outdoors or such spaces (attic or crawl) that freely communicate with outdoors. Avoid linty environments. For additional venting information, refer to the regulations of the National Fire Protection Standard for oil burning equipment, ANSI/NFPA N0. 31-latest edition, or the cleaning equipment manufacturers recommendations.

NOZZLE AND AIR HANDLING PARTS SELECTION

IMPORTANT: Thorough combustion and performance testing was done to establish the correct nozzle type and air handling parts on this MSR-DC oil burner. Under circumstance attempt to replace or alter the oil burner nozzle type or air handling parts (stainless steel flamelock, air cone, electrode support style static disc, blower wheel or slotted air circumstances attempt to fire the MSR-DC oil burner under its 1.00 gph minimum or over its 2.75 gph maximum input rating.

To remove the gun assembly once the burner has been installed on the appliance remove the ignitor/housing cover screw and loosen the screw in the hold-down clip and swing open the transformer. Next, disconnect the copper oil line where it attaches with a 7/16" hex flare nut on the gun assembly oil line adapter fitting and remove the 9/16" hex gun assembly locknut. Now, grasp the rear of the gun assembly where the oil line fitting adapter exits through the housing and pull oil line fitting adapter to the right out of the housing slot and slot plate cover. Gently lift, do not force, the rear of the gun assembly, rotating the oil line fitting adapter up a 45 degrees pulling the entire gun assembly out of the air tube and housing opening.

The recommended can be installed into the nozzle body adapter using the following steps. With the gun assembly removed from the burner, loosen the electrode clamp screw and rotate the electrodes up, out of the way of a nozzle wrench. Now, thread the nozzle into the adapter finger tight then tighten securely with a nozzle wrench. **CAUTION:** Do not over tighten. Next, reposition the electrodes as shown in figure 1. At this time reinstall the gun assembly into the burner using the preceding steps in reverse order. Position the nozzle face forward to a 5/16" setting behind the stainless steel air cone as shown in figure 1. Once in the required position, replace the 9/16" hex lock nut and the 7/16" hex flare nut on the gun assembly and tighten the slot cover screw (see figure 2).

CAUTION: Close the ignitor and observe for spring contact with the brass buss bars, taking care not to pinch the ignition transformer lead wires between the housing and cover plate. Reinstall the ignitor/housing cover screw and tighten the screw in the hold down clip (see figure 2).

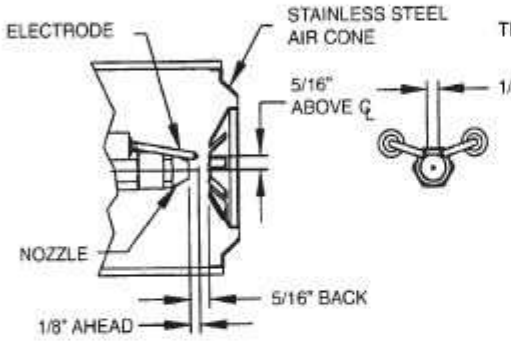

FIGURE 1

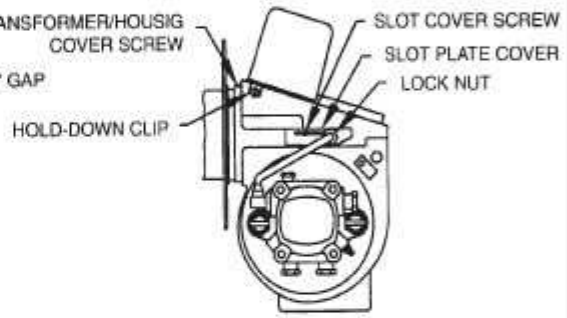

FIGURE 2

STARTING PROCEDURE

PREPARATION STEPS

1. Calibrate and check operation of combustion analysis equipment, CO_2 (carbon dioxide) or O_2 (oxygen) analyzer, smoke pump tester, fuel gas thermometer and oil pressure/vacuum gages. Follow the manufacture recommendation for proper calibration and check out.
2. Install oil pressure gage and vacuum gage in the outlet pressure and inlet ports of the fuel unit.
3. Set oil burner slotted air band shutter 25% open.

STARTING BURNER

1. Turn off the main power switch to the burner and appliance.
2. Be sure main fuel tank is filled and all manual valves are open between the fuel tank and the burner.
3. Turn on the main power switch to the burner and appliance.
4. Prime the fuel pump per its manufacturers recommendations, check fuel unit for 100 psi delivery pressure and check system vacuum (see paragraphs under Fuel Units and Oil Lines).

   CAUTION: Do not run fuel unit dry for more than five minutes or damage to the fuel unit could result.

5. Once the fuel unit is primed (no signs of air in oil bleeder port discharge), close the bleed port. Burner will ignite.
6. When flame is established, make a temporary air adjustment to the slotted air band for a visually clean combustion smoke observed from the appliance vent. Allow the appliance to warm up approximately five minutes or until the water temperature reaches that recommended by the cleaning equipment manufacture.
7. Adjust the slotted air band shutter until a #1 to #2 smoke (Shell Bacharach scale) is obtained at the appliance vent.
8. Check CO_2 (carbon dioxide) and/or O_2 (oxygen) percentages and smoke in the flue gas at the appliance vent. In general, CO_2 readings should be in the 10% to 12% range and O_2 readings in the 7.4% to 4.7% range.
9. Once the desired combustion results are attained, securely tighten slotted air band screw and check that controls on the appliance are adjusted per the cleaning equipment manufactures instruction sheets. Remove oil pressure and vacuum gages from the fuel unit and reinstall pipe plug fittings.
10. Check burner lighting with hot chamber, then allow burner and appliance to sufficiently cool. Then check burner lighting with a cold chamber.

SUGGESTION: all new installations should be reinspected after one or two weeks of normal operation.

MAINTENANCE

OILING MOTOR – The MSR_DC oil burner is provided with a ball bearing shaft motor. Ball-bearing motors do not require oiling under normal service conditions.

FILTER – The oil filter cartridge should be replaced, or sediment cleaned, periodically so the fuel oil will not become contaminated and plug up the fuel pump and nozzle of oil burner.

NOZZLE – The nozzle should be changed at least once each year or twice a year if the cleaning equipment is used daily through the year and should poor combustion occur. Replace with the proper nozzle.

COMPONENTS – If for any reason any of the burner parts have to be replaced, always use parts recommended by the manufacturer. Specify part numbers and description when ordering. (IN ALL COMMUNICATIONS STATE BURNER MODEL AND SIX DIGIT SPECIFICATION NUMBER).

ELECTRODE SETTINGS – This is very important for reliable ignition of the oil; check these once a year in accordance with the instructions provided in this manual. Replace electrodes if worn excessively or if porcelain insulator is oil soaked or cracked (See Figure 1).

FAN & BLOWER HOUSING – This must be kept clean, free of dirt and lint; open transformer to check fan blades from above. Be sure the electric power is off on burner when the transformer is opened up for this inspection. Should the blower wheel be removed for replacement or cleaning, reinstall as shown in figure 3.

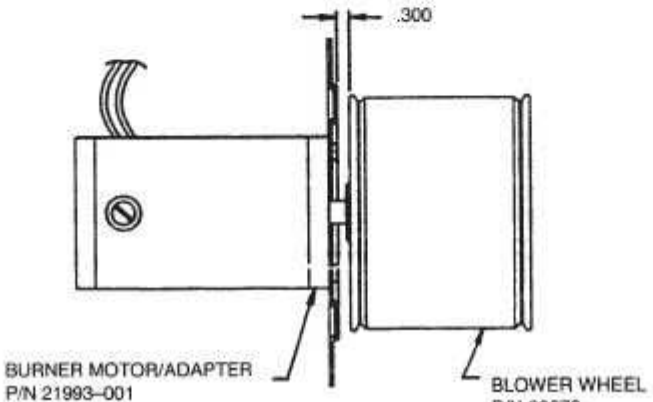

FIGURE 3

BURNER COMPONENTS - MODEL MSR-DC

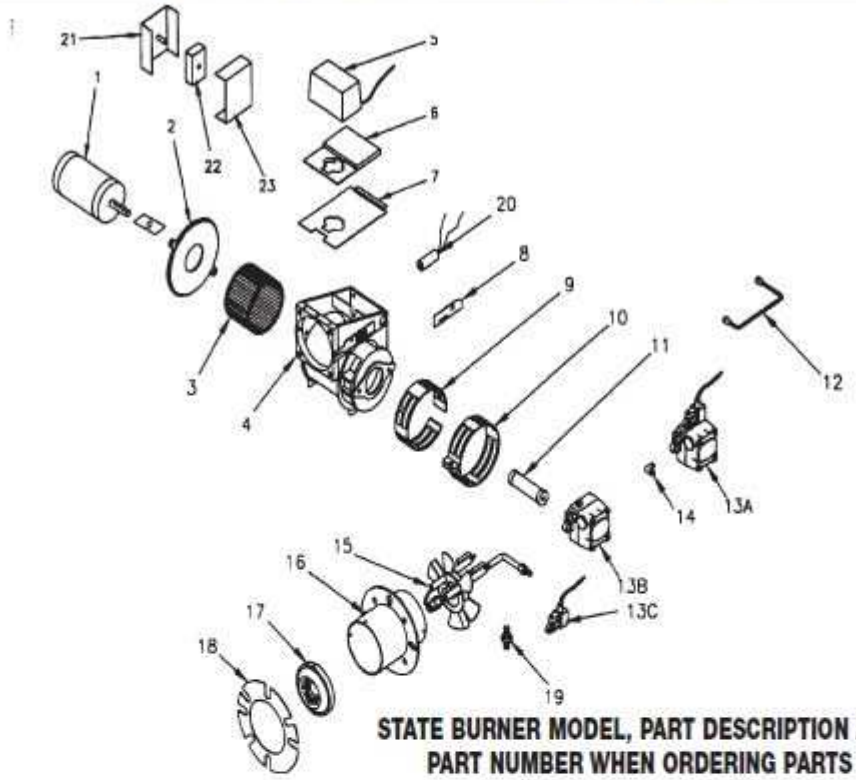

STATE BURNER MODEL, PART DESCRIPTION AND PART NUMBER WHEN ORDERING PARTS

AIR TUBE & GUN ASSEMBLY DETAILS MODEL MSR-DC

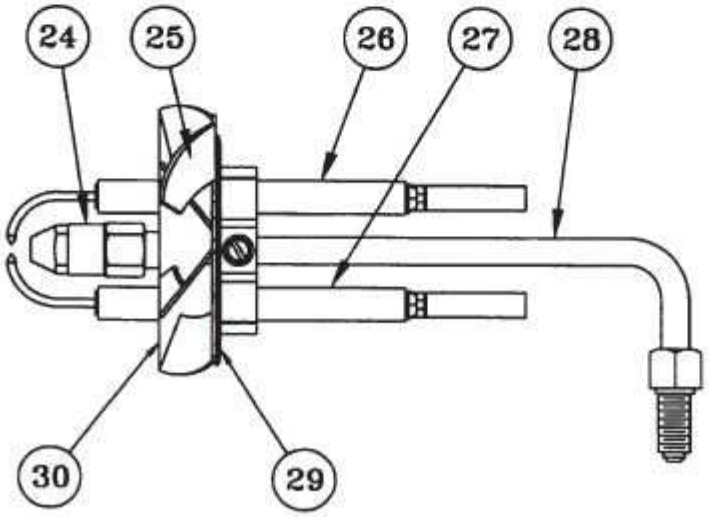

ITEM	QTY	PART #	DESCRIPTION
1	1	8046448-1	MOTOR 1/8 STANDARD
	1		MOTOR 1/8 LOW AMP
2	1	8046448-2	MOTOR ADAPTER
3	1	8046448-3	BLOWER WHEEL 3 1/2 X 4 1/4
4	1	8046448-4	BURNER HOUSING
5	1	8046448-5	IGNITOR - 12VDC
6	1	8046448-6	MOUNTING BASE
7	1	8046448-7	HOUSING COVER
8	1	8046448-8	SLOT COVER PLATE
9	1	8046448-9	INNER AIR BAND
10	1	8046448-10	OUTER AIR BAND
11	1	8046448-11	COUPLING
12	1	8046448-12	OIL LINE ASSEMBLY 6"
	1		OIL LINE ASSEMBLY 8"
13	1	8046448-13A	FUEL UNIT: SUNTEC COMBO
	1	8046448-13B	FUEL UNIT: SUNTEC
	1	8046448-13C	FUEL SOLENOID
14	1	8046448-14	ELBOW (USE WITH 13A)
15	1	8046448-15	GUN ASSEMBLY
16	1	8046448-16	AIR TUBE/FLANGE ASM
17	1	8046448-17	AIR CONE - #3A
	1		AIR CONE - #4A
18	1	8046448-18	GASKET
19	1	8046448-19	CONNECTOR (USE WITH 13B, 13C)
20	1	8046448-20	CAD CELL
21	1	8046448-21	CONTROL BOX
22	1	8046448-22	TIMER, DROP OUT
23	1	8046448-23	COVER, CONTROL BOX
24	1	8046448-24	ADAPTOR, NOZZLE SUPPORT
25	1	8046448-25	ELECTRODE SUPPORT ASM
26	1	8046448-26	ELECTRODE (RH)
27	1	8046448-27	ELECTRODE (LH)
28	1	8046448-28	OIL PIPE/FITTING
29	1	8046448-29	DISC/BAFFLE PLATE
30	1	8046448-30	CAST STABILIZER
	1		STAMPED STABILIZER

Suggested Combustion Chamber Dimensions Conversion or Upgrading Chamber Dimensions (In Inches)					
Firing Rate (G.H.P)	Square		Round	Height	Floor to Nozzle
	Width	Length			
0.85	8.5	8.5	8.5	8.5	8.5
1.00	9	9	10⅛	12½	5-6
1.25	10	10	11¼	12½	5-6
1.35	10½	10½	11¾	12¾	5-6
1.50	11	11	12⅜	13	5-6
1.65	11½	11½	13	13¼	5-6
2.00	12⅝	12⅝	14¼	13½	6-7
2.50	14¼	14¼	16	14	7-8
3.00	15½	15½	17½	15	7-8

TO DETERMINE THE AIR TUBE LENGTH

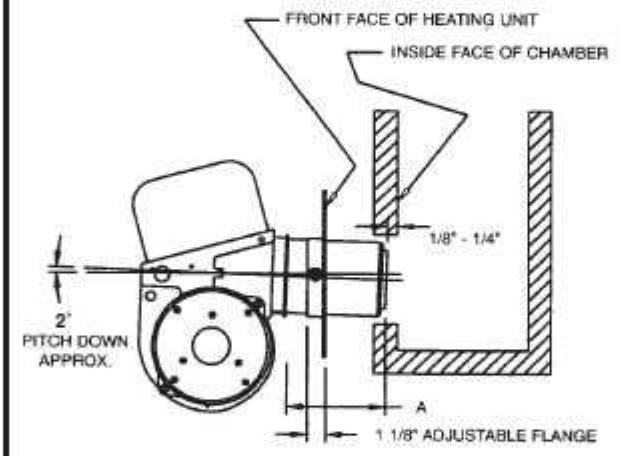

THE AIR TUBE LENGTH (DIM A) IS THE DISTANCE FROM THE FRONT OF AIR TUBE RETAINER FLANGE TO FACE OF AIR CONE. NOTE ADJUSTABLE FLANGE WIDTH.

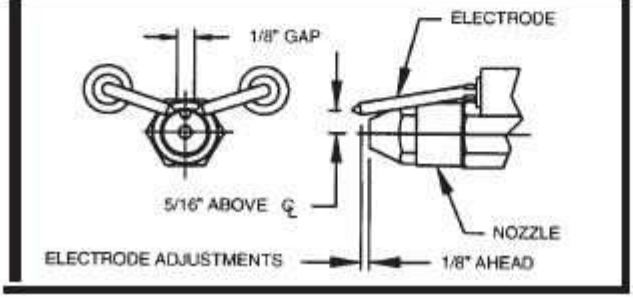

Notes

Notes

15

WAYNE COMBUSTION SYSTEMS
801 GLASGOW AVE.
FORT WAYNE, IN 48803

LIMITED WARRANTIES FOR OIL AND GAS BURNERS, MADE BY WAYNE AND USED IN RESIDENTIAL INSTALLATIONS

WAYNE COMBUSTION SYSTEMS ("WAYNE") warrants to those who purchase its **Oil Burner Models** for resale or for incorporation into a product of resale, that its burner is free from defects in material and workmanship under normal use and service for thirty-six (36) months from the date of manufacture. **ALL GAS BURNERS** manufactured by **"WAYNE"** will be similarly warranted for eighteen(18) months from date of manufacture except where original manufacture offers a greater warranty. (Reference #6 below) THESE LIMITED WARRANTIES DO NOT APPLY UNLESS THE BURNER COVERED BY IT **IS PROPERLY INSTALLED BY A QUALIFIED, COMPETENT TECHNICIAN**, WHO IS LICENSED WHERE STATE AND/OR LOCAL CODES PREVAIL, AND **WHO IS EXPERIENCED IN MAKING SUCH INSTALLATIONS**, IN ACCORDANCE WITH NFPA #31 OF THE NATIONAL FIRE PROTECTION ASSOCIATION AND IN ACCORDANCE WITH ALL LOCAL, STATE AND NATIONAL CODES.

Any **IN-WARRANTY** burner component which is defective in material or workmanship will be either repaired or replaced as follows:

1. Fuel units, motors, transformers, gas valves, and controls should be returned to an authorized service station or distributor of WAYNE for determination of applicability of this LIMITED WARRANTY as to either repair or replacement, where said service station or distributor is reasonably available in the customer's locality. The manufacturers of burner components regularly publish and distribute listings showing the locations of their network of service stations. Where such local service is NOT available for the burner components described above or other burner parts are involved, these items should be returned, freight prepaid, to WAYNE Service Department, 801 Glasgow Ave, Fort Wayne, Indiana 46803.
2. Burners and/or component(s) determined to be covered under this LIMITED WARRANTY by WAYNE shall be repaired or replaced at WAYNE's sole option.
3. WAYNE is not responsible for any labor cost for the removal and replacement of said burner or burner components and equipment associated therewith.
4. A burner so repaired will then carry the LIMITED WARRANTY equal to the unexpired portion of the original burner LIMITED WARRANTY.
5. If inspection by WAYNE does **NOT** disclose any defect covered by this LIMITED WARRANTY, the burner or burner component(s) will be either repaired or replaced at the expense of the customer and WAYNE's regular charges will apply.
6. If the original manufacturer of a burner component offers a warranty greater than either of our LIMITED WARRANTIES described above, then this portion will be added to our LIMITED WARRANTY.

This LIMITED WARRANTY does **NOT** cover products which have been damaged as the result of accident, abuse, misuse, neglect, improper installations, improper maintenance or failure to operate in accordance with WAYNE's written instructions.

These LIMITED WARRANTIES do not extend to anyone except the first purchaser at retail and only when the burner is in the original installation site.

IMPLIED WARRANTIES OF MERCHANTABILITY AND FITNESS FOR A PARTICULAR PURPOSE SHALL BE LIMITED TO THE DURATION OF THE LIMITED EXPRESS WARRANTIES CONTAINED HEREIN. WAYNE EXPRESSLY DISCLAIMS AND EXCLUDES ANY LIABILITY FOR CONSEQUENTIAL OR INCIDENTAL DAMAGES OF ANY NATURE FOR BREACH OF ANY EXPRESS OR IMPLIED WARRANTY.

Some states do not allow limitation on how long an implied warranty lasts, so the above limitation may not apply to you. Also, some states do not allow the exclusion or limitation of incidental or consequential damages, so the above limitation or exclusion may not apply to you. WAYNE neither assumes or authorizes any person to assume for WAYNE any other liability or obligation in connection with the sale of these products. This warranty gives you specific legal rights, and you may also have other rights which vary from state to state.

PAGE LEFT BLANK

WARRANTY
RETURN GOODS POLICY

LIMITED WARRANTY

The Manufacturer warrants its products to be free from defects in material and workmanship for a period of twelve months from the date of shipment from the factory. The Manufacturer shall not be responsible for any damage resulting to or caused by its products by reason of installation, improper storage, unauthorized service, alteration of the products, neglect or abuse, or use of the product in a manner inconsistent with its design. The warranty does not extend to any component parts not manufactured by Manufacturer; however, Manufacturer's warranty herein shall not limit any warranties made by manufacturers of component parts which extend to Buyer.

Claims for defects in material and workmanship shall be made in writing to Manufacturer within ten days of discovery of defect. Manufacturer may either send a service representative or have the product returned to its factory at Buyer's expense for inspection. Upon notification of defect, Manufacturer will issue a return goods authorization number to Buyer. The return goods authorization number must accompany the product returned. If judged by the Manufacturer to be defective in material or workmanship, the product will be replaced or repaired at the option of the Manufacturer, free from all charges except authorized transportation. Buyer shall be responsible for all maintenance services consisting of lubrication and cleaning of equipment, replacing expandable parts, making minor adjustments, and performing operating checks, all in accordance with procedures outlined in Manufacturer's maintenance literature.

THE FOREGOING WARRANTY IS IN LIEU OF ALL OTHER WARRANTIES AND NO REPRESENTATIONS, GUARANTEES, OR WARRANTIES, EXPRESS OR IMPLIED, (INCLUDING BUT NOT LIMITED TO A WARRANTY OF MERCHANTABILITY OR FITNESS FOR A PARTICULAR PURPOSE), ARE MADE BY THE MANUFACTURER IN CONNECTION WITH THE MANUFACTURE OR SALE OF ITS PRODUCTS. NO EMPLOYEE, DISTRIBUTOR, OR REPRESENTATIVE IS AUTHORIZED TO CHANGE THIS WARRANTY ON BEHALF OF MANUFACTURER.

THE REMEDIES OF BUYER SET FORTH HEREIN ARE EXCLUSIVE AND ARE IN LIEU OF ALL OTHER REMEDIES. THE LIABILITY OF MANUFACTURER WHETHER IN CONTRACT, TORT, UNDER ANY WARRANTY, OR

OTHERWISE SHALL NOT EXTEND BEYOND ITS OBLIGATION TO REPAIR OR REPLACE, AT ITS OPTION ANY PRODUCT OR PART FOUND BY MANUFACTURER TO BE DEFECTIVE IN MATERIAL OR WORKMANSHIP. MANUFACTURER SHALL NOT BE LIABLE FOR COST OF INSTALLATION AND/OR REMOVAL OR BE RESPONSIBLE FOR DIRECT, INDIRECT, SPECIAL OR CONSEQUENTIAL DAMAGES OF ANY NATURE.

GENERAL RETURNS OF MERCHANDISE

1. All returns must be pre-authorized
   A. Please call our parts department for an RGA number
   B. Please include RGA number on the outside of box
   C. Include any required paper work or special instructions
   D. Items returned without an RGA number will not be accepted
2. All returns are subject to a 20% restock charge.
3. Special items are non-returnable
   A. Non-stock parts
   B. Custom parts
   C. If you are unsure about a parts status when ordering, ask your McLaughlin representative if the item fits on of the above conditions.
4. Items must be returned within thirty days of original order date.
5. Items not returned within 30 days from the date of RGA is issued will not be accepted.
6. The item(s) must be in new condition. Used item(s) are not returnable.

Maintenance Record

DATE	SERVICE PERFORMED	BY

Notes

FOR SCHEMATICS SEE: www.mclaughlinunderground