McLAUGHLIN®

2006 Perimeter Road. Greenville, SC 29605
Toll Free: 800/435-9340 - Phone: 864/277-5870
Fax: 864/235-9661 - Website address: www.mclaughlinunderground.com
Email address: mmole@mightymole.com

Parts Manual
Vermeer/ McLaughlin
SKID V1200HD Vacuum Machine
Part #E850611
(Serial Number S12XD111212293 - S12X041913614)

© 2013 by McLaughlin Group, Inc.

020413

All rights reserved. No part of this manual may be reproduced in any form, or by any means without prior written permission of McLaughlin Group, Inc.

Table of Contents

PARTS

SPOIL TANK AND FILTRATION

HYDRAULIC DOOR 4
HYDRAULIC DOOR CYLNDER 6
FILTRATION 8

ENGINE COMPARTMENT

ENCLOSURE 10
ENGINE 18
BLOWER 26
WATER PUMP 44
REGULATOR 62
ELECTRICAL 66
HYD. POWERPACK 70
HYDRAULIC PUMP 76

WATER TANK AND ACCESSORIES

WATER TANKS - 125 GALLON SADDLE 80
WATER TANKS - 230 GALLON 82
WATER TANKS - 410 GALLON 84
WATER TANKS - 205 GALLON SADDLE 86
HOSE REEL 88

TRAILER AND SKID ASSEMBLY

ANTI-FREEZE 92
SKID ASSEMBLY 94
HOSES 98

TOOLS

TOOL RACK 100
REDUCTION TOOL 104
VACUUM TOOL 106
WASH WAND 108
VALVE BOX CLEANOUT TOOL 110
ROTARY LANCE 112
LAWN SWEEPER 116
SURFACE CLEANER 118

OPTIONS

BOOM 120
HOT BOX 134
JETTER 136
ARROWBOARD 140
AUX HYDRAULIC 142

ELECTRICAL SCHEMATICS

VACUUM DIESEL ENGINE 145
BOOM 151
ARROWBOARD 153
HOT BOX 155
JETTER 157

HYDRAULIC SCHEMATICS

BOOM 159

MAINTENANCE MANUALS

ROOTS BLOWER 162
HOT BOX 173
ENGINE 184

WARRANTY

Tank and Door Assembly 1200

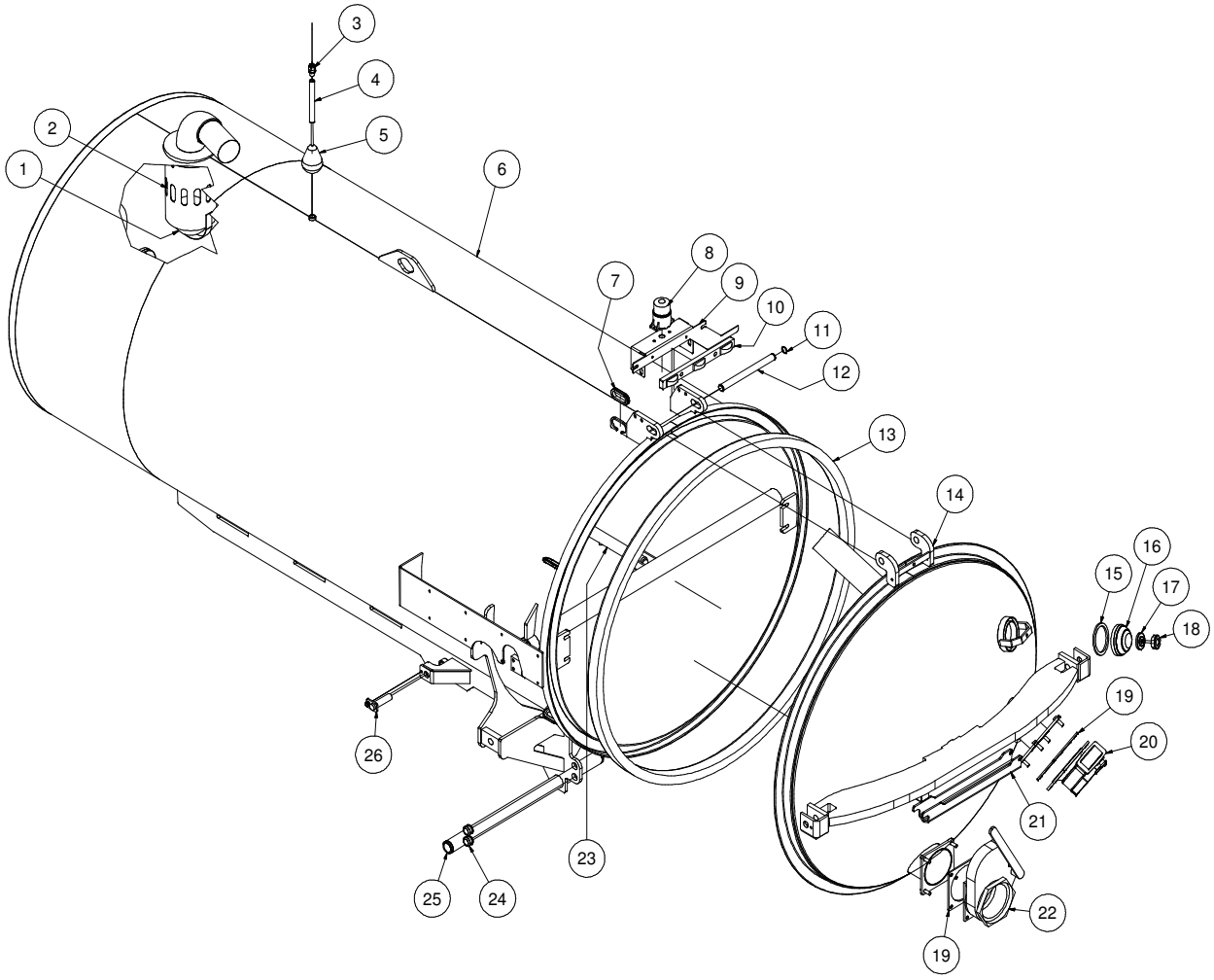

100112-E

VACASSY036

Tank and Door Assembly 1200

ITEM	QTY	PART NO.	DESCRIPTION
1	1	8043570	BALL STRAINLESS FLOAT 6”
2	1	8043700	BALL FLOAT SHUTOFF WELDMENT
	2	U000420	SCREW, HC 3/8” - 16 X 1.00”
	2	U210060	WASHER, LOCK 3/8”
	1	8043571	SEAT 4” RUBBER
	1	8043572	SEAT CLAMP 4”
3	1	X000113	STRAIN RELIEF, 1/2”
4	1	8040769	HIGH LEVEL FLOAT SWITCH TUBE
5	1	8030531	HIGH LEVEL FLOAT SWITCH
6	1	8048450	TANK 1200 - WELDMENT
7	4	8042812	GROMMET 2”ID 3”OD 1/4”WOG TSM
8	1	8043139	LIGHT, STROBE LED DEUTSCH
	3	U010006	SCREW, PHILLIPS #10 - 24 X 1.00”
	3	U210005	WASHER, LOCK #10
	3	U100010	NUT, HEX #10 - 24
9	1	8046507	STROBE LIGHT BRACKET
	4	U000880	SCREW, HC 1/2” - 13 X 2.00”
	4	U200100	WASHER, FLAT 1/2”
	4	U210111	WASHER, LOCK 1/2”
	4	U100120	NUT, HEX 1/2”-13
	1	X000343	DT MOUNTING CLIP
10	1	8041509	LIGHT CLEARANCE BAR
11	2	8030362	1” SNAP RING
12	1	8040058	DOOR HINGE ROD
13	1	8041767	DOOR SEAL 54”DIA. TANK
14	1	8048453	DOOR 1200 WITH INLET (US)
	1	8048454	DOOR 1200 WITH INLET (AUS)
15	1	8032007	GASKET, 4” COUPLER
16	1	8031048	SIGHT GLASS
17	1	8031047	SIGHT GLASS PLATE
18	1	8031046	SIGHT GLASS HAND WHEEL
19	2	8046191	GASKET, INLET/OUTLET DOOR LE
20	1	8046215	4” GATE VALVE FLANGED
21	1	8041212	TANK SAFETY BRACE
22	1	8046214	VALVE, 6” GATE BRASS LEVER
	1	8030849-50	HANDLE,6"GATE VALVE(RIV MODEL)
23	1	8043567	TANK ROD 1200 (54” DIA TANK)
	3	8030369	NOZZLE, TANK CLEANOUT
24	4	8041686	GROMMET 1”ID 1 1/4”DOG 1/4”WO
25	1	8042648	TANK PIVOT ROD
26	2	8040753	CYLINDER PIN WELDMENT
	2	U000400	SCREW, HC 3/8” - 16 X 1.00”
	2	U200600	WASHER, FLAT 3/8”
	2	U210060	WASHER, LOCK 3/8”

* NOT SHOWN

Hyd. Door Cylinder Assembly

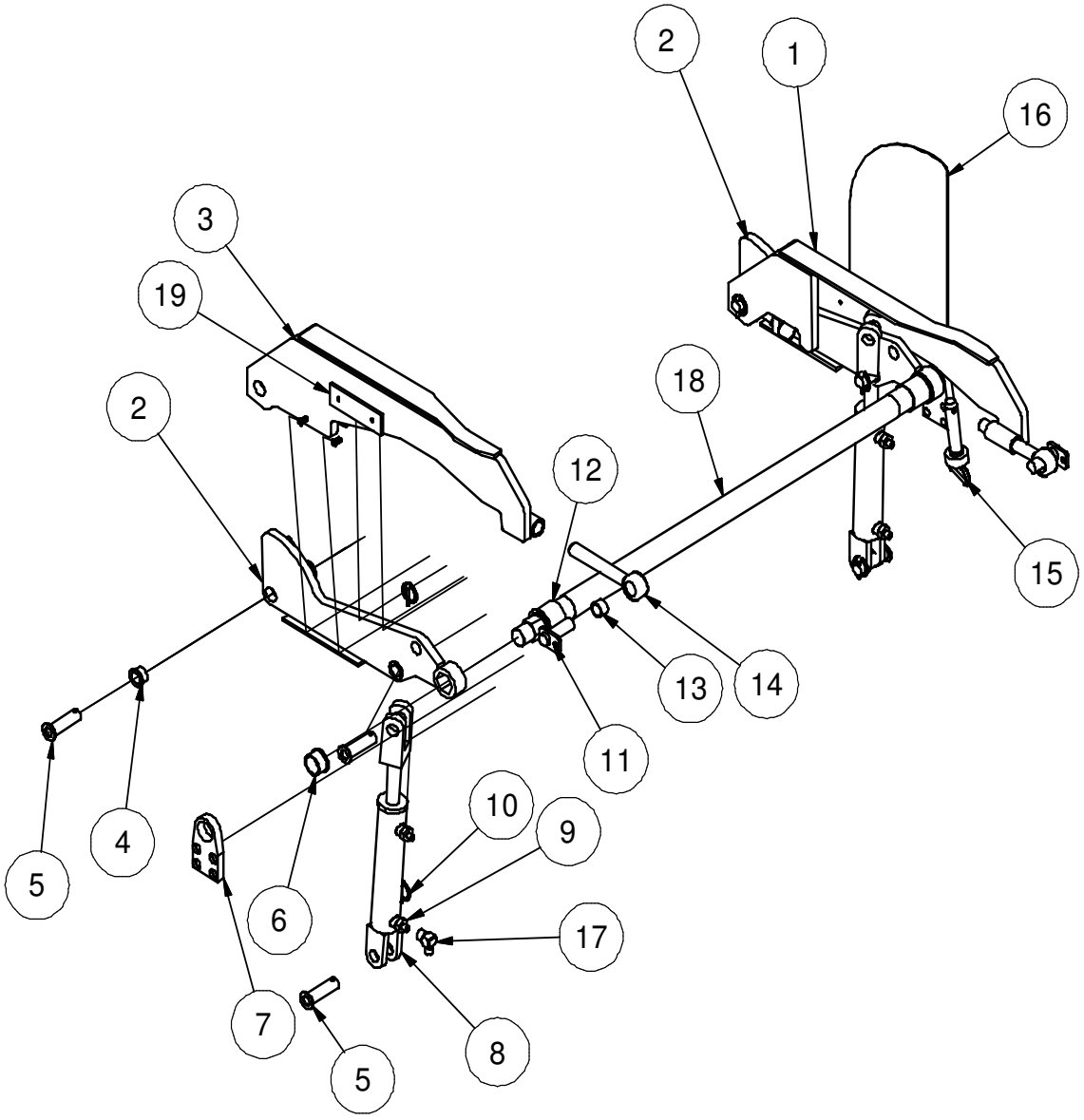

080415-E

VACASSY942

Hyd. Door Cylinder Assembly

ITEM	QTY	PART NO.	DESCRIPTION
1	1	8041369	DOOR HYD LONG LINKAGE WELDMENT
2	2	8049766	SHORT LINKAGE WELDMENT
3	1	8041375	DOOR HYD LONG LINKAGE SS WELDMENT
4	6	8041883	BUSHING BRONZE FLANGED 1”
5	6	8042489	HYD DOOR - PIN WELDMENT 1”DIA X 3”
6	2	8041649	BUSHING 1 1/4” MODIFIED
7	1	8041783	OUTER BEARING PLATE
8	2	8041327	HYD CYLINDER - 8” STROKE
9	4	T400611	UNION 8MB - 4MJ
10	6	U340050	PIN LINCH 3/16 X 1 9/16
11	2	8043844	DOOR CAPTURE PIN
12	2	8041602	BUSHING BRONZE FLANGED 2”
13	2	8041524	BUSHING BRONZE 1 1/4” X 1.00 X 3/4”LG
14	2	8043131	ROD END 1” X 7 1/2”
	2	U160025	NUT, JAM 1.00”
	2	U120060	NUT, NY LOCK 1”
	4	U200170	WASHER, FLAT 1.00”
15	1	8041626	1” X 4 1/2” HITCH PIN
16	1	8041635	HYD ARM GUARD
17	1	T401225	ELBOW, 90 1/4MJ - 1/4FJ
18	1	8041607	LINKAGE CROSS TUBE V500
	1	8046186	LINKAGE CROSS TUBE V750 / V800LE
	1	8041663	LINKAGE CROSS TUBE V800 / V1200
19	2	8049376	PLASTIC STRIP, 1/4” X 2” X 6”LG
	4	U030017	SCREW,SFH .250-20X1.00 ZP
	4	U120000	NUT,LOCK, NY, .250-20 ZP G2
	4	U200020	WASHER FLAT .250 ZP

Filtration HD

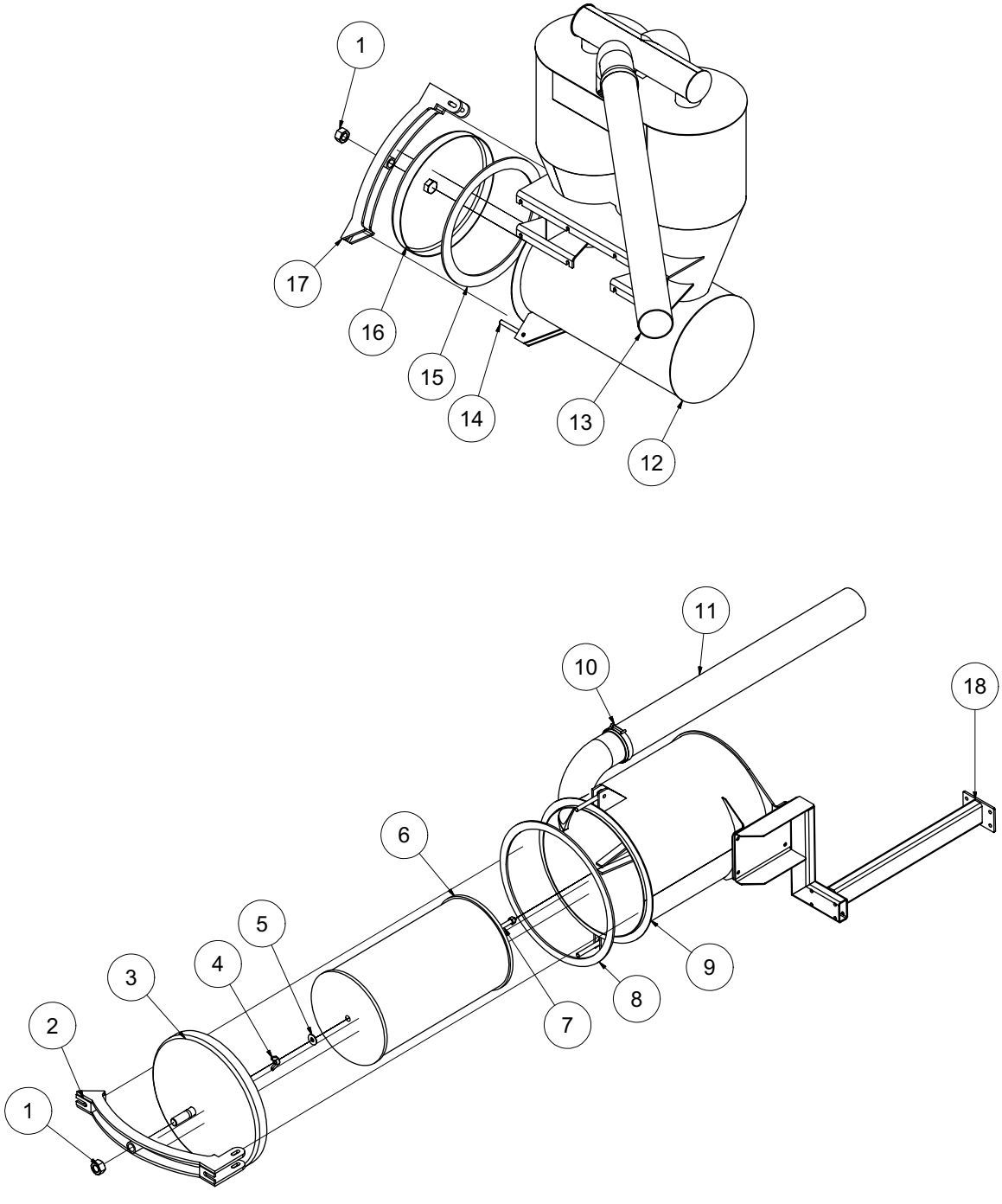

041212-E

VACASSY347

Filtration HD

ITEM	QTY	PART #	DESCRIPTION
1	2	U120060	NUT, LOCK NY 1” - 8
2	1	8041554	DOOR LATCH (HD AIR FILTER WELDMENT)
3	1	8041387	HD AIR FILTER DOME ASSY
4	1	U130080	NUT, WING 1/2” - 13
5	1	U200100	WASHER, FLAT 1/2”
6	1	8031293	WASHABLE AIR FILTER ELEMENT
7	1	8040302	THREADED ROD - 4”LG
8	1	8041613	SEAL 3/8” EPDM 17.
9	1	8046338	HD AIR FILTER HOUSING
*	10	U200060	WASHER, FLAT .375
*	1	U000520	SCREW, HC 3/8” - 16 X 2.25”
*	1	U000580	SCREW, HC 3/8” - 16 X 3.50”
*	4	U000420	SCREW, HC 3/8”-16 X 1.00”
*	8	U000440	WASHER, FLAT 3/8”
*	4	U120110	NYLON LOCKNUT 3/8”-16
*	2	8041594	HANDLE, WING
10	4	8042606	CLAMP T-BOLT (450)
11	1	8046804	HOSE VAC AG SUCTION 4-189” (V500)
	1	8046805	HOSE VAC AG SUCTION 4-206” (V800)
	1	8046998	HOSE VAC AG SUCTION 4-156” (VSK300)
12	1	8046458	HD SEPARATOR - HOUSING ONLY
*	10	U000440	WASHER, FLAT 3/8”
*	1	U000520	SCREW, HC 3/8” - 16 X 2.25”
*	1	U000580	SCREW, HC 3/8” - 16 X 3.50”
*	2	U120110	NYLON LOCKOUT 3/8 - 16
*	2	8041594	HANDLE, WING
*	8	U000420	SCREW, HC 3/8”-16 X 1.00”
*	16	U200060	WASHER, FLAT 3/8”
*	8	U210061	NYLON LOCKNUT 3/8”-16
13	1	8041781	HOSE VAC AG SUCTION 4-48”
14	4	8041593	BOLT, EYE 1/2” - 13 X 6”
15	1	8041612	SEAL 3/8” EPDM 14”ID, 17.25”OD
16	1	8041402	HD CYCLONE DOME DOOR ASSY
17	1	8041552	DOOR LATCH (CYCLONE) - WELDMENT
18	1	8046243	AIR FILTER BRACKET LE
*	4	U210060	WASHER, LOCK 3/8” ZP
*	4	U000441	SCREW, HC 3/8-16 X 1.25”
*	4	U000440	WASHER, FLAT 3/8”
*	4	U100060	NUT, HEX 3/8”-16

* NOT SHOWN

041212-E

VACASSY347

Enclosure Assembly 67 HP

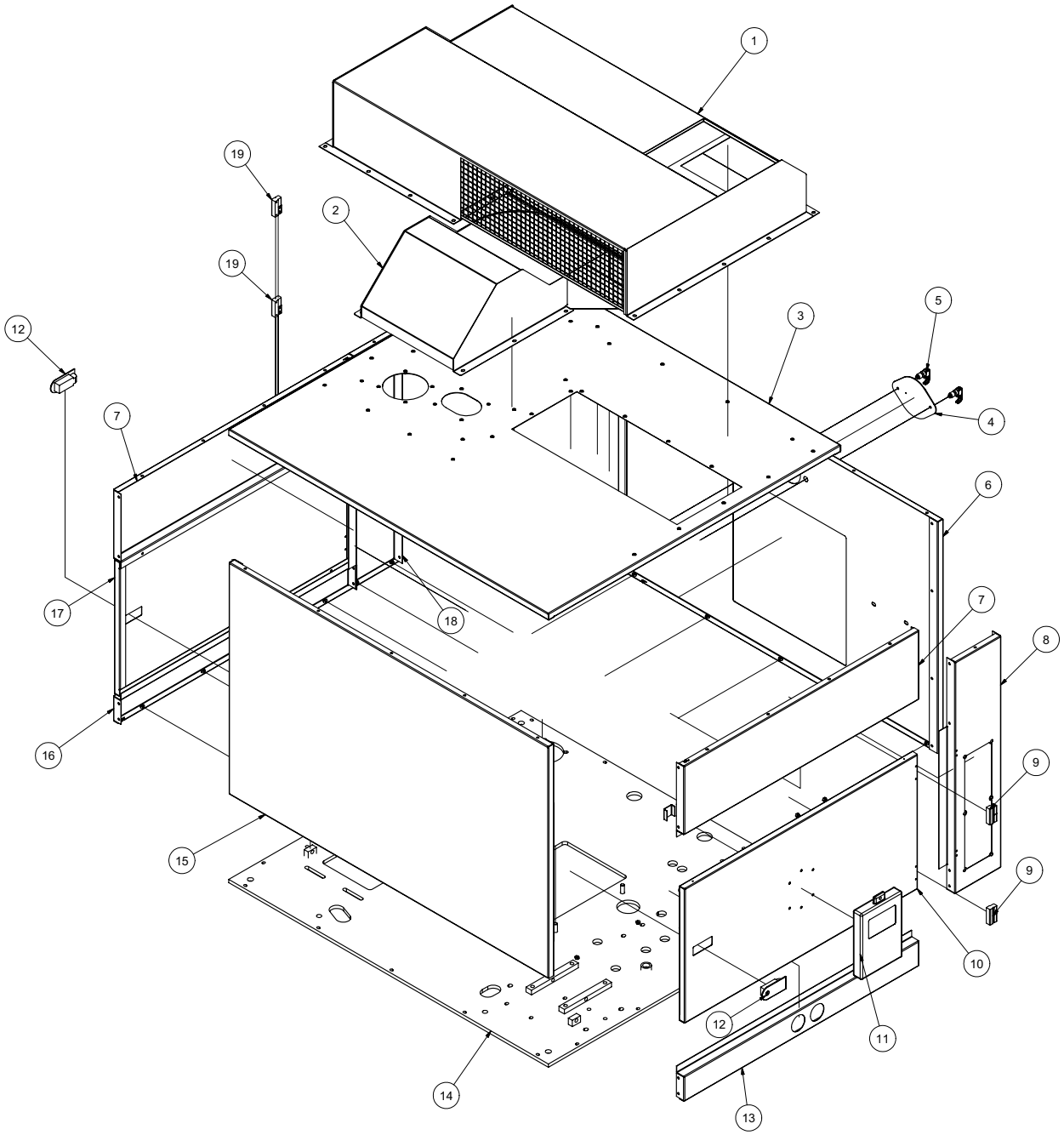

013013-E **VACASSY406**

Enclosure Assembly 67 HP

ITEM	QTY	PART #	DESCRIPTION
1	1	8044271	INTAKE BOX
2	1	8044283	EXHAUST SHEILD
3	1	8044250	PANEL TOP
4	1	8040592	RADIATOR ACCESS COVER
5	2	8040334	SWELL LATCH
6	1	8044248	PANEL FRONT
*	1	8044301	LS FRONT SOUND INSULATION
*	1	8044302	RS FRONT SOUND INSULATION
*	1	8044930	BELOW RADIATOR SOUND INSULATION
*	1	8044931	ABOVE RADIATOR SOUND INSULATION
7	2	8044257	PANEL SIDE UPPER
*	2	8044308	SIDE UPPER SOUND INSULATION
8	1	8043614	PANEL SIDE VERTICAL CONTROL
*	1	8044303	SIDE VERTICAL CONTOL PANEL SOUND INSULATION
9	2	8040588	OFFSET HINGE TYPE “A”
10	1	8044260	PANEL DOOR FOR MANUAL
*	1	8044310	DOOR SOUND INSULATION
11	1	E250211	BOX, PLASTIC for SAFETY MANUAL
12	2	8040586	SEALED LEVER LATCH
	1	8041816	KEY DOOR SOUTHCO LATCH
13	1	8044262	PANEL SIDE LOWER GAUGES
*	1	8044307	SIDE LOWER SOUND INSULATION
14	1	8047102	MAIN PLATE
15	1	8044252	PANEL REAR
*	1	8044306	LS REAR SOUND INSULATION
*	1	8044947	RS REAR SOUND INSULATION
16	1	8044254	PANEL SIDE LOWER
*	1	8044307	SIDE LOWER SOUND INSULATION
17	1	8044258	PANEL DOOR
*	1	8044309	DOOR SOUND INSULATION
18	1	8043922	PANEL SIDE VERTICAL
*	1	8044304	SIDE VERTICAL SOUND INSULATION
19	2	8040589	OFFSET HINGE TYPE “B”
*	20	U000060	SCREW, HC 1/4-20 X 1
*	36	U000020	SCREW, HC 1/4-20 X 1/2
*	112	U200020	WASHER, FLAT 1/4”
*	36	U120100	NUT, HEX LOCK 1/4”
*	1	8041171	HANDLE
	2	U001017	SCREW, HSH 1/4-20 X 1.25
	2	U200020	WASHER, FLAT 1/4”
	2	U120100	NUT, HEX LOCK 1/4-20
*	2	8041504	DOOR SEAL VERTICAL
*	1	8044223	EXHAUST FLANGE
*	1	8048909	EXHAUST INSULATION

* NOT SHOWN

013013-E

VACASSY406

Enclosure Assembly 67HP RC

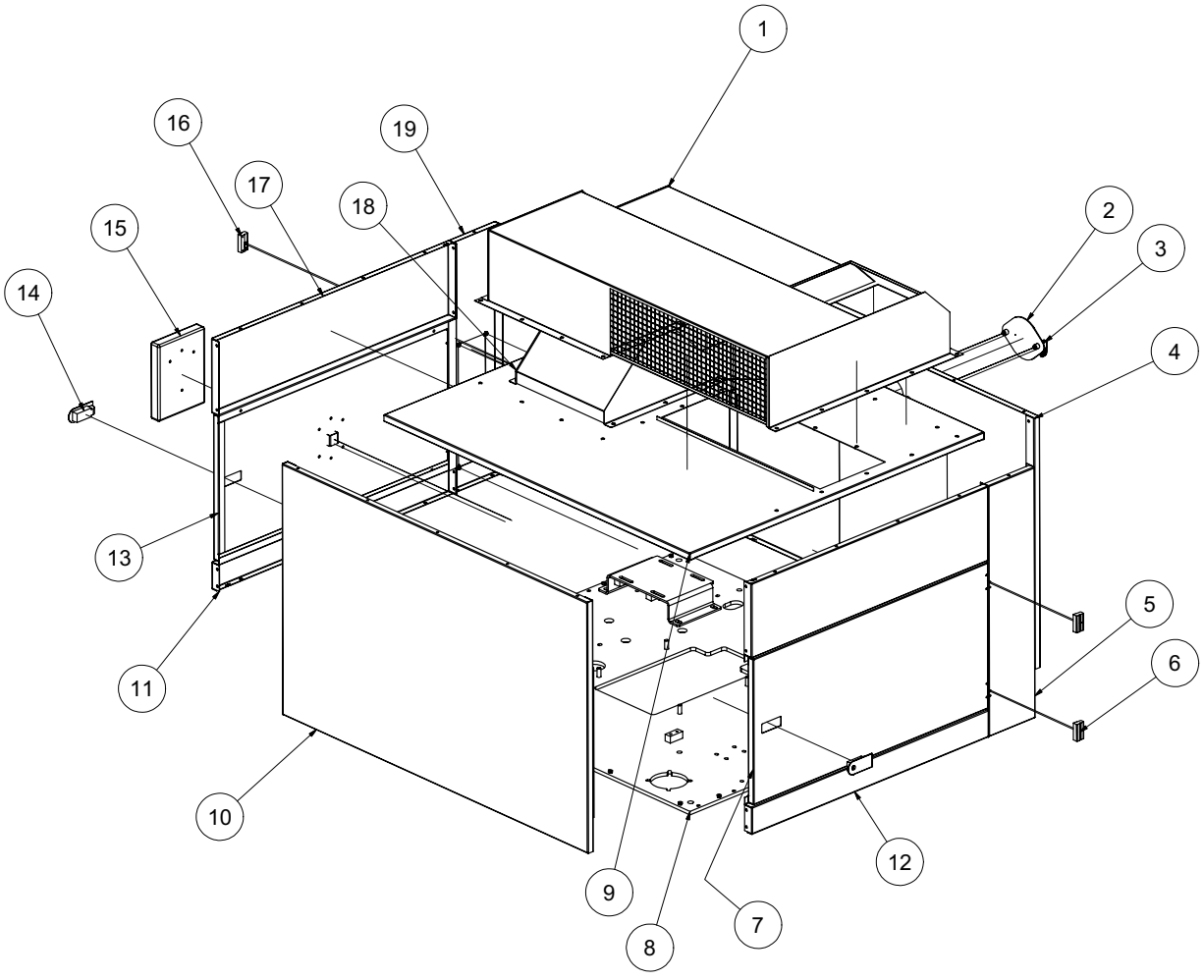

013013-E **VACASSY415**

Enclosure Assembly 67HP RC

ITEM	QTY	PART NO.	DESCRIPTION
1	1	8044271	INLET OUTLET BOX
2	1	8040592	ENCLOSURE RADIATOR COVER
3	2	8040334	SWELL LATCH
4	1	8044248	PANEL FRONT
*	1	8044301	LS FRONT SOUND INSULATION
*	1	8044302	RS FRONT SOUND INSULATION
*	1	8044930	BELOW RADIATOR SOUND INSULATION
*	1	8044931	ABOVE RADIATOR SOUND INSULATION
5	1	8043924	PANEL SIDE VERTICAL
*	1	8044304	SIDE VERTICAL SOUND INSULATION
6	2	8040588	OFFSET HINGE TYPE “A”
7	1	8044258	PANEL DOOR
*	1	8044309	DOOR SOUND INSULATION
8	1	8047102	73HS MAIN PLATE WELDMENT
9	1	8044250	PANEL TOP WELDMENT
10	1	8044252	PANEL REAR
*	1	8044306	LS REAR SOUND INSULATION
*	1	8044947	RS REAR SOUND INSULATION
11	1	8044262	PANEL SIDE LOWER GAUGES
*	1	8044307	SIDE LOWER INSULATION
12	1	8044254	PANEL SIDE LOWER
*	1	8044307	SIDE LOWER INSULATION
13	1	8044260	PANEL DOOR W/TRANS. BOX 73HS
*	1	8044310	DOOR SOUND INSULATION
14	2	8040586	SEALED LEVER LATCH
	1	8041816	KEY DOOR SOUTHCO LATCH
15	1	E250210	BOX, PLASTIC FOR SAFETY MANUAL
16	2	8040589	OFFSET HINGE TYPE “B”
17	2	8044257	PANEL SIDE UPPER 73HS
*	2	8044308	SIDE UPPER SOUND INSULATION
18	1	8044283	EXHAUST SHIELD
19	1	8043917	PANEL SIDE VERTICAL CTRL 49VK
*	1	8044303	SIDE VERTICAL CONTROL PANEL SOUND INSULATION
*	1	8044223	EXHAUST FLANGE
*	1	8048909	EXHAUST INSULATION

* NOT SHOWN

013013-E

VACASSY415

Enclosure Assembly 99AW

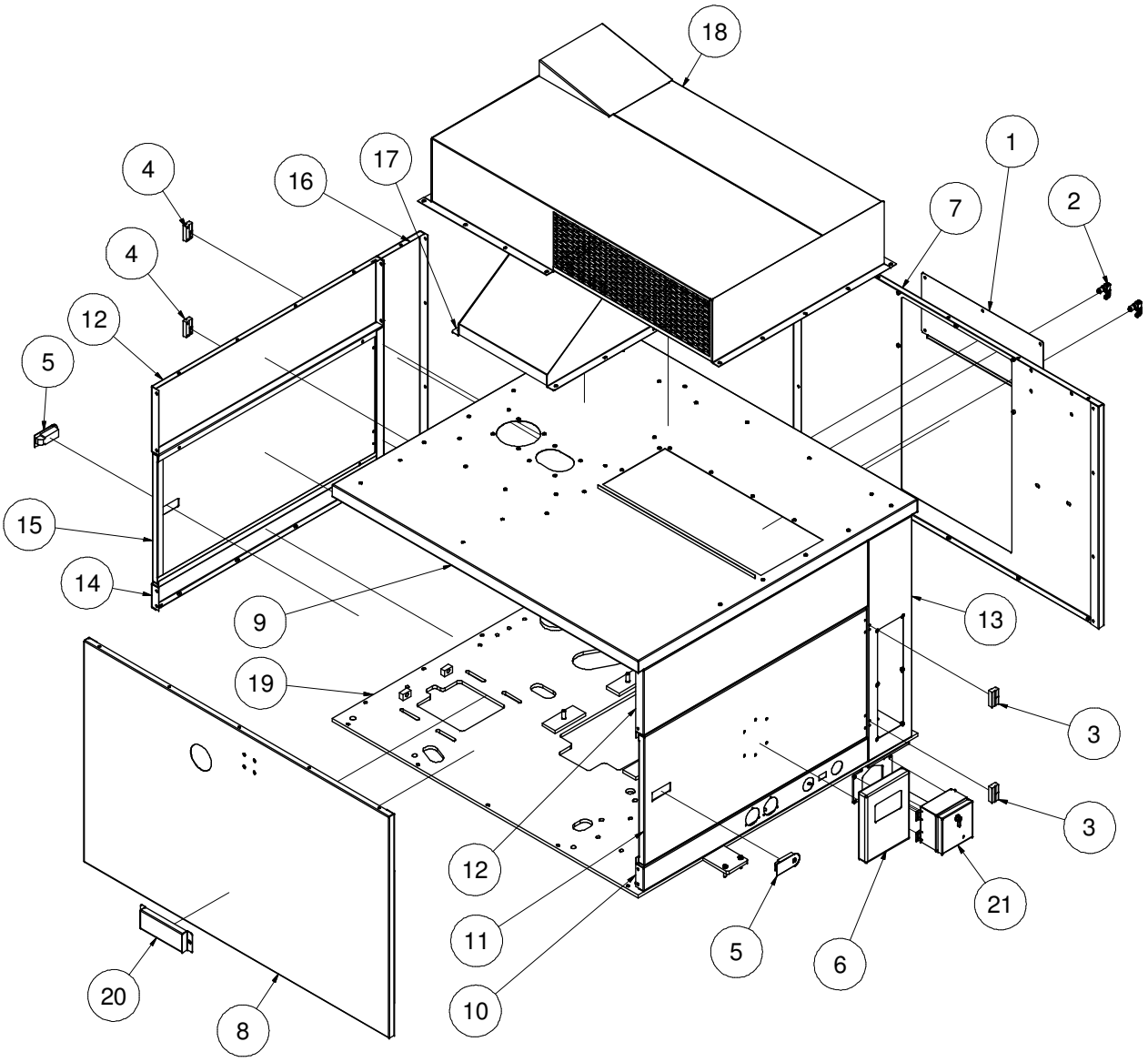

040413-E

VACASSY420

Enclosure Assembly 99AW

ITEM	QTY	PART #	DESCRIPTION
1	1	8048431	ENCLOSURE ACCESS COVER PANEL
2	2	8040334	SWELL LATCH
	2	U120147	NUT, FLANGED LOCK 5/16”-24
3	2	8040588	OFFSET HINGE TYPE B
	8	U010010	SCREW, HSH #10-32 X 3/8”
4	2	8040589	OFFSET HINGE TYPE A
	8	U010010	SCREW, HSH #10-32 X 3/8”
5	2	8040586	SEALED LEVER LATCH
	1	8041816	KEY DOOR SOUTHCO LATCH
6	1	E250210	MANUAL BOX
7	1	8044551	87HS - PANEL FRONT
	1	8044301	73HP SOUND INSULATION FRONT LEFT HAND
	1	8044302	73HP SOUND INSULATION FRONT RIGHT HAND
	1	8044930	73HP SOUND INSULATION BELOW RADIATOR
	1	8044931	73HP SOUND INSULATION ABOVE RADIATOR
8	1	8044252	73HS PANEL REAR WELDMENT
	1	8044306	73HP SOUND INSULATION BACK RS
	1	8044947	73HP SOUND INSULATION BACK LS
9	1	8046893	PANEL TOP 99AW WELDMENT
10	1	8044256	87HS PANEL SIDE LWR GAUAGES WELDMENT (AIR WATER)
	1	8044307	73HP SOUND INSULATION UNDER DOOR
11	1	8044260	73HS SOUND INSULATION W/ TRANSMITTER MOUNT WELDMENT
	1	8044310	73HP SOUND INSULATION RH DOOR
12	2	8044257	73HS PANEL SIDE UPPER
	2	8044308	73HP SOUND INSULATION ABOVE DOOR
13	1	8043614	49VK VERTICAL CONTROL WELDMENT
	1	8044303	73HP SOUND INSULATION CONTROL PANEL
14	1	8044254	73HS PANEL SIDE LOWER WELDMENT
	1	8044307	73HP SOUND INSULATION UNDER DOOR
15	1	8044258	73HS PANEL SIDE DOOR
	1	8044309	73HP SOUND INSULATION LH DOOR
16	1	8043922	49VK PANEL SIDE VERTICAL BLANK WELDMENT
	1	8044304	73HP SOUND INSULATION OPP. CONTROL PANEL
17	1	8044283	EXHAUST SHIELD
18	1	8048983	INLET OUTLET BOX
19	1	8047282	MAIN PLATE 99AW LE - WELDMENT
20	1	8046716	PANEL GUARD ENGINE SHAFT 99AWJ
21	1	8049096	ENCLOSURE GAUGE BOX AW
*	20	U000060	SCREW,HC 1/4-20X1
*	36	U000020	SCREW,HC 1/4-20X1/2
*	112	U200020	WASHER,FLAT 1/4
*	36	U120100	NUT,HEX LOCK 1/4
*	1	8041171	HANDLE
	2	U001017	SCREW,HSH 1/4-20X1.25
	2	U200020	WASHER,FLAT 1/4
	2	U120100	NUT,HEX LOCK 1/4-20
*	2	8041483	DOOR SEAL VERTICAL
*	1	8044223	ENCLOSURE EXHAUST FLANGE
*	1	8048909	EXHAUST INSULATION

* NOT SHOWN

040413-E **VACASSY420**

Enclosure Assembly 99AW RC

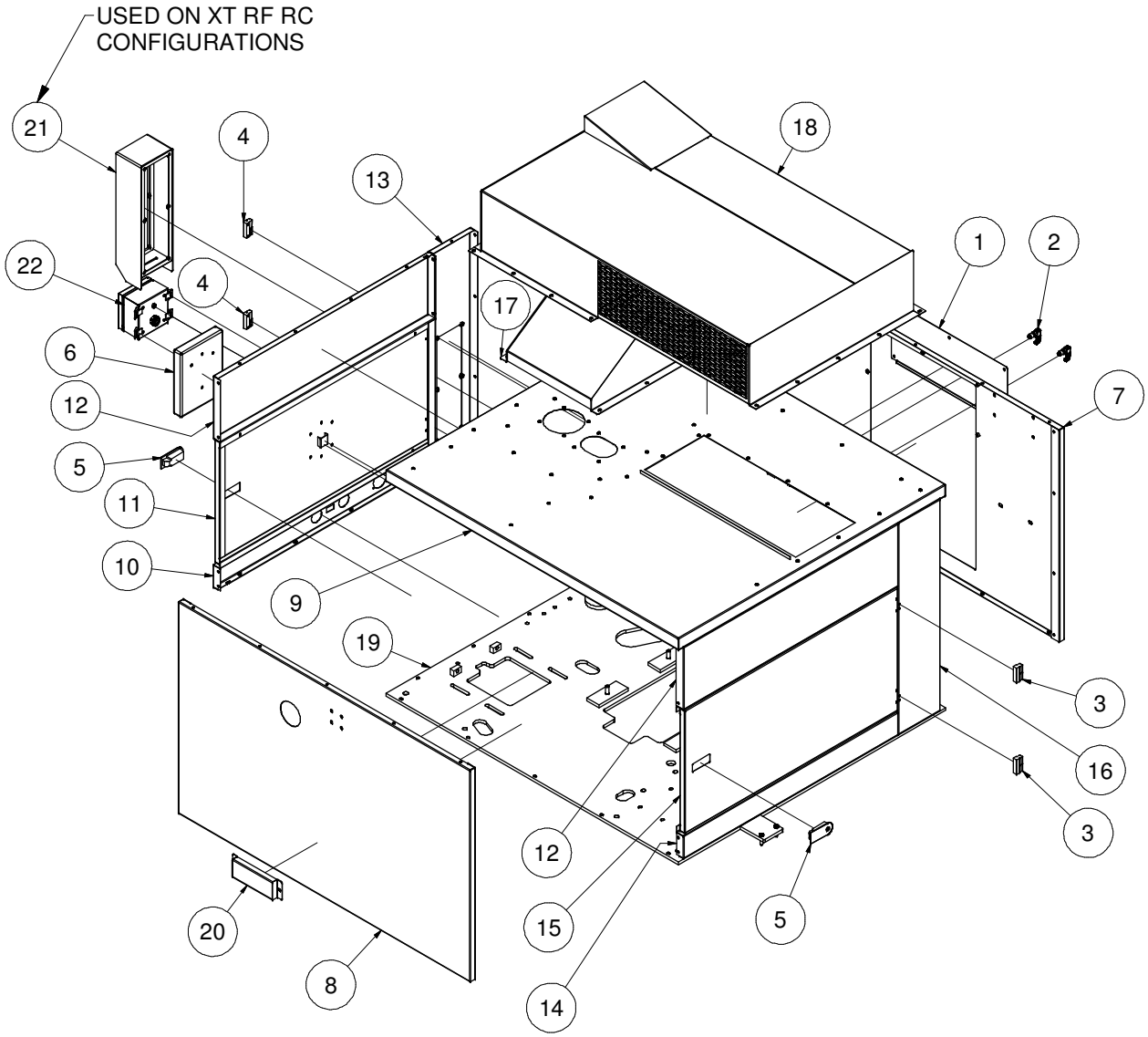

040413-E

VACASSY421

Enclosure Assembly 99AW RC

ITEM	QTY	PART #	DESCRIPTION
1	1	8048431	ENCLOSURE ACCESS COVER PANEL
2	2	8040334	SWELL LATCH
	2	U120147	NUT, FLANGED LOCK 5/16”-24
3	2	8040588	OFFSET HINGE TYPE B
	8	U010010	SCREW, HSH #10-32 X 3/8”
4	2	8040589	OFFSET HINGE TYPE A
	8	U010010	SCREW, HSH #10-32 X 3/8”
5	2	8040586	SEALED LEVER LATCH
	1	8041816	KEY DOOR SOUTHCO LATCH
6	1	E250210	MANUAL BOX
7	1	8044551	87HS - PANEL FRONT
	1	8044301	73HP SOUND INSULATION FRONT LEFT HAND
	1	8044302	73HP SOUND INSULATION FRONT RIGHT HAND
	1	8044930	73HP SOUND INSULATION BELOW RADIATOR
	1	8044931	73HP SOUND INSULATION ABOVE RADIATOR
8	1	8044252	73HS PANEL REAR WELDMENT
	1	8044306	73HP SOUND INSULATION BACK RS
	1	8044947	73HP SOUND INSULATION BACK LS
9	1	8046893	PANEL TOP 99AW WELDMENT
10	1	8044256	87HS PANEL SIDE LWR GAUAGES WELDMENT (AIR WATER)
	1	8044307	73HP SOUND INSULATION UNDER DOOR
11	1	8044260	73HS SOUND INSULATION W/ TRANSMITTER MOUNT WELDMENT
	1	8044310	73HP SOUND INSULATION RH DOOR
12	2	8044257	73HS PANEL SIDE UPPER
	2	8044308	73HP SOUND INSULATION ABOVE DOOR
13	1	8043614	49VK VERTICAL CONTROL WELDMENT
	1	8044303	73HP SOUND INSULATION CONTROL PANEL
14	1	8044254	73HS PANEL SIDE LOWER WELDMENT
	1	8044307	73HP SOUND INSULATION UNDER DOOR
15	1	8044258	73HS PANEL SIDE DOOR
	1	8044309	73HP SOUND INSULATION LH DOOR
16	1	8043922	49VK PANEL SIDE VERTICAL BLANK WELDMENT
	1	8044304	73HP SOUND INSULATION OPP. CONTROL PANEL
17	1	8044283	EXHAUST SHIELD
18	1	8048983	INLET OUTLET BOX
19	1	8047282	MAIN PLATE 99AW LE - WELDMENT
20	1	8046716	PANEL GUARD ENGINE SHAFT 99AWJ
21	1	8048170	PANEL U-EXTENSION
22	1	8049096	ENCLOSURE GAUGE BOX AW
*	20	U000060	SCREW,HC 1/4-20X1
*	36	U000020	SCREW,HC 1/4-20X1/2
*	112	U200020	WASHER,FLAT 1/4
*	36	U120100	NUT,HEX LOCK 1/4
*	1	8041171	HANDLE
	2	U001017	SCREW,HSH 1/4-20X1.25
	2	U200020	WASHER,FLAT 1/4
	2	U120100	NUT,HEX LOCK 1/4-20
*	2	8041483	DOOR SEAL VERTICAL
*	1	8048909	EXHAUST INSULATION
*	1	8044223	EXHAUST INSULATION FLANGE

* NOT SHOWN

040413-E **VACASSY421**

Engine Kubota V3600

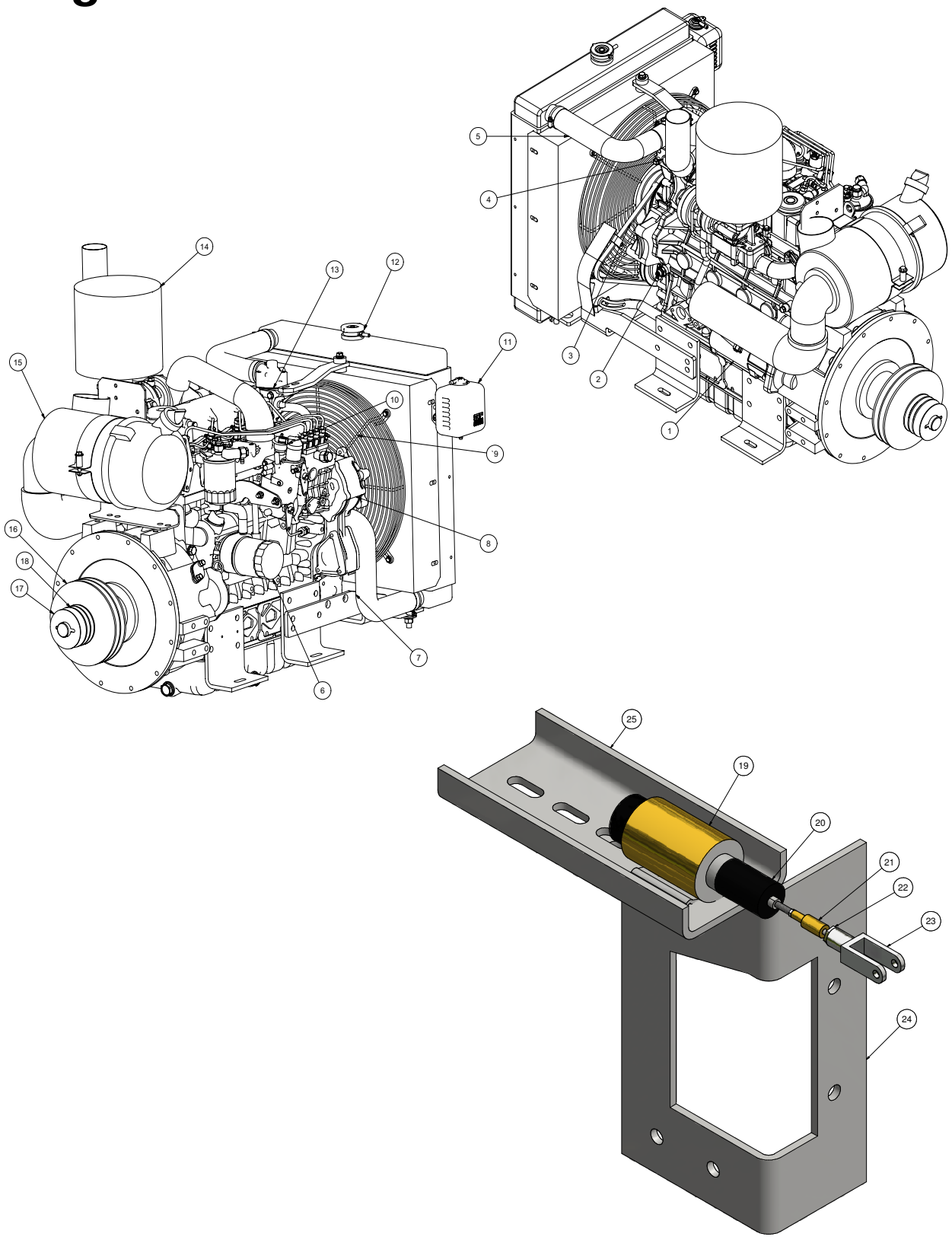

021913-E

VACASSY852

Engine Kubota V3600

ITEM	QTY	NUMBER	DESCRIPTION
	1	8047103	ENGINE
1	1	8045583	STARTER
2	1	8030960	OIL PRESSURE SWITCH
3	1	8045584	FAN BELT
4	1	8043952	WATER TEMPERTURE SWITCH
5	1	8045585	UPPER RADIATOR HOSE
6	1	8032002	OIL FILTER
7	1	8045586	LOWER RADIATOR HOSE
8	1	8045587	ALTERNATOR
9	1	8045588	FAN
10	1	8045589	FUEL SHUTOFF SOLENOID
11	1	8045590	OVERFLOW TANK
			OVERFLOW TANK CAP (Sold With Tank)
12	1	8045591	RADIATOR CAP
13	1	8045592	THERMOSTAT
14	1	8045593	MUFFLER
15	1	8045594	AIR FILTER HOUSING
*	1	8041055	AIR FILTER ELEMENT (INNER)
*	1	8041054	AIR FILTER ELEMENT (OUTER)
16	1	8044243	SHEAVE, BLOWER 8.35" OD 2517 TL
	1	8042659	BUSHING, TL2517 1 7/16"
17	1	8041799	KEYWAY RETAINER
18	1	8040480	SHEAVE, WATERPUMP 4.15"OD SH 2-GROOVE
	1	8040481	BUSHING, 1 7/16" SH
*	1	8041053	FUEL FILTER
*	1	8045595	FUEL PUMP
*	1	T400106	RADIATOR DRAIN FITTING
*	1	8047108	BRACKET, WATER SEPARATOR
*	1	8047265	OIL / WATER SEPARATOR
19	1	8030667	THROTTLE SOLENOID
20	1	8030667-1	RETURN SPRING
21	1	8046052	THROTTLE SOLENOID SPRING SWIVEL
22	2	8030667-5	JAM NUT
23	1	8030667-3	CLEVIS (INCLUDES PIN AND COTTER PIN)
24	1	8030667-11	THROTTLE SOLENOID BRACKET (VERTICAL)
25	1	8030667-10	THROTTLE SOLENOID BRACKET
*	1	X300299	CABLE BATTERY KIT 67-99HP WITH ELECT. HYD. PUMP

* Not Shown

Engine Kubota V3600

Boom/ Aux. Hyd.

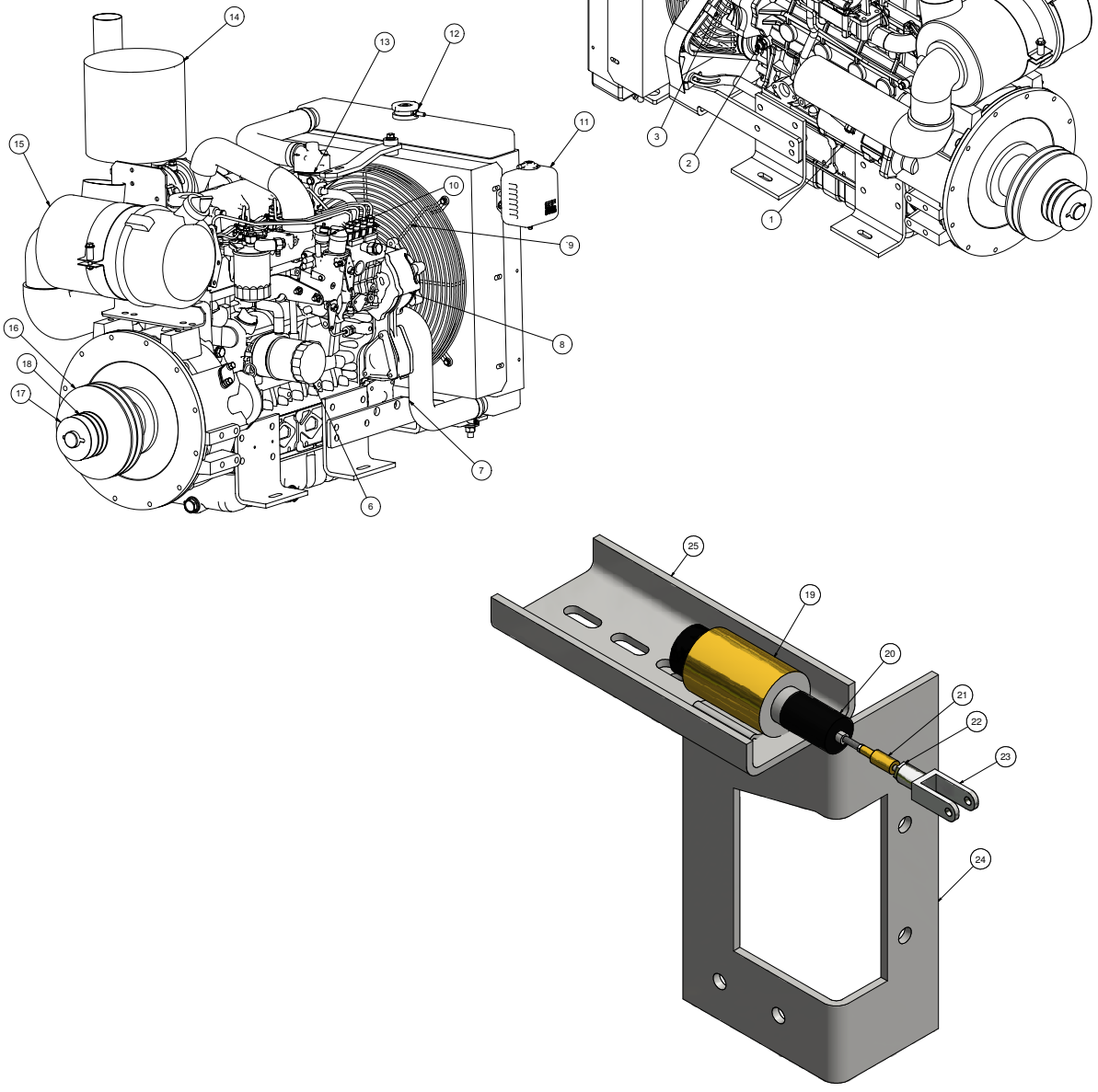

022113-E

VACASSY01802

Engine Kubota V3600

Boom/ Aux. Hyd.

ITEM	QTY	NUMBER	DESCRIPTION
	1	8047103	ENGINE
1	1	8045583	STARTER
2	1	8030960	OIL PRESSURE SWITCH
3	1	8045584	FAN BELT
4	1	8043952	WATER TEMPERTURE SWITCH
5	1	8045585	UPPER RADIATOR HOSE
6	1	8032002	OIL FILTER
7	1	8045586	LOWER RADIATOR HOSE
8	1	8045587	ALTERNATOR
9	1	8045588	FAN
10	1	8045589	FUEL SHUTOFF SOLENOID
11	1	8045590	OVERFLOW TANK
			OVERFLOW TANK CAP (Sold With Tank)
12	1	8045591	RADIATOR CAP
13	1	8045592	THERMOSTAT
14	1	8045593	MUFFLER
15	1	8045594	AIR FILTER HOUSING
*	1	8041055	AIR FILTER ELEMENT (INNER)
*	1	8041054	AIR FILTER ELEMENT (OUTER)
16	1	8044243	SHEAVE, BLOWER 8.35" OD 2517 TL
	1	8042659	BUSHING, TL2517 1 7/16"
17	1	8041799	KEYWAY RETAINER
18	1	8040480	SHEAVE, WATERPUMP 4.15" OD SH 2-GROOVE
	1	8040481	BUSHING, 1 7/16" SH
*	1	8041053	FUEL FILTER
*	1	8045595	FUEL PUMP
*	1	T400106	RADIATOR DRAIN FITTING
*	1	8047108	BRACKET, WATER SEPARATOR
*	1	8047265	OIL / WATER SEPARATOR
19	1	8030667	THROTTLE SOLENOID
20	1	8030667-1	RETURN SPRING
21	1	8046052	THROTTLE SOLENOID SPRING SWIVEL
22	2	8030667-5	JAM NUT
23	1	8030667-3	CLEVIS (INCLUDES PIN AND COTTER PIN)
24	1	8030667-11	THROTTLE SOLENOID BRACKET (VERTICAL)
25	1	8030667-10	THROTTLE SOLENOID BRACKET
*	1	X300296	CABLE BATTERY KIT 67-99HP WITH NO ELECT. HYD. PUMP

* Not Shown

022113-E

VACASSY01802

Engine Kubota V3800T 99HP

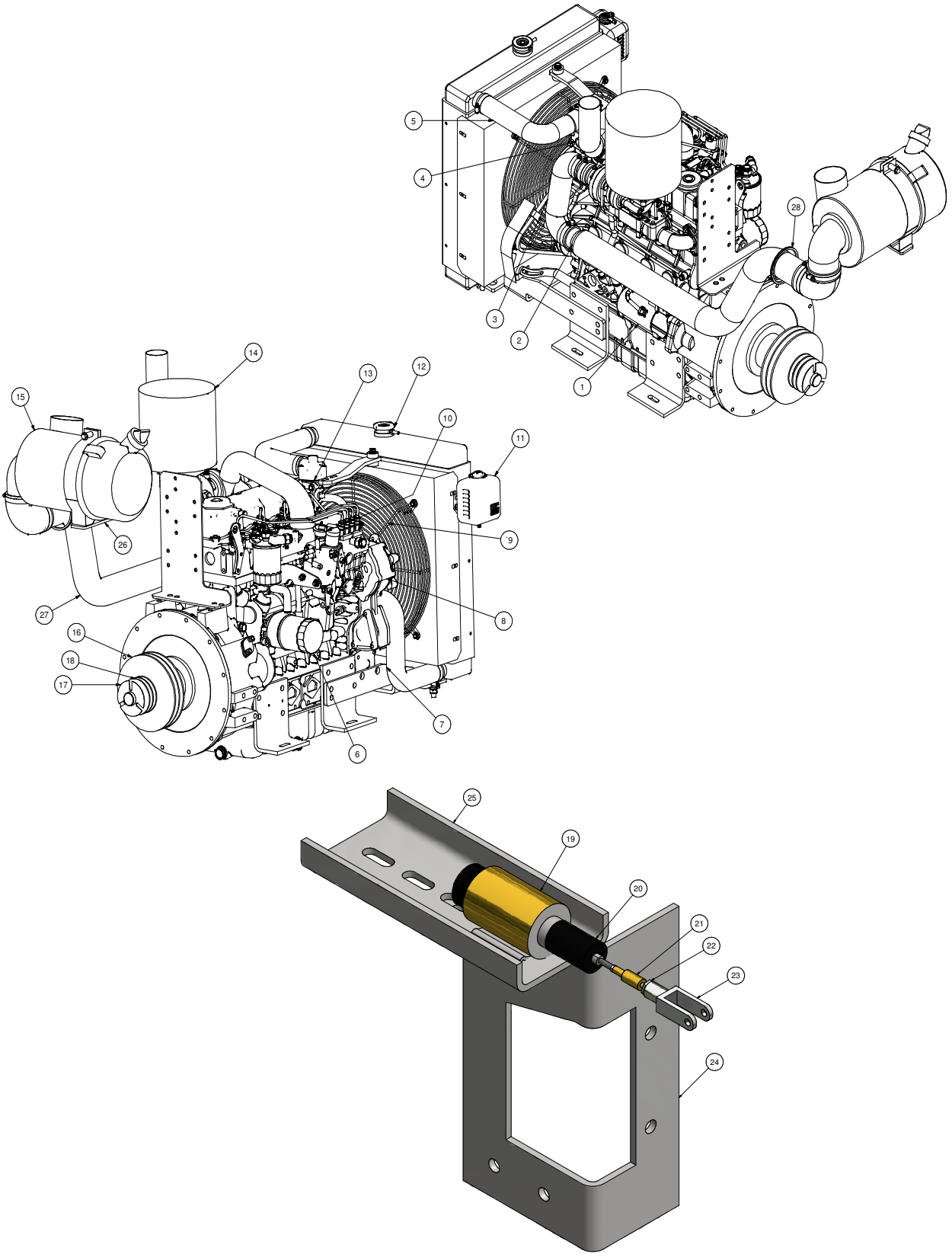

020113-E

VACASSY849

Engine Kubota V3800T 99HP

ITEM	QTY	NUMBER	DESCRIPTION
	1	8045154	ENG, KUBOTA 99HP (Short SAE4 HSG)
1	1	8046034	STARTER
2	1	8030960	OIL PRESSURE SWITCH
3	1	8046035	FAN BELT
4	1	8043952	WATER TEMPERTURE SWITCH
5	1	8045585	UPPER RADIATOR HOSE
6	1	8032002	OIL FILTER
7	1	8045586	LOWER RADIATOR HOSE
8	1	8046036	ALTERNATOR
9	1	8045588	FAN
10	1	8045589	FUEL SHUTOFF SOLENOID
11	1	8045590	OVERFLOW TANK
			OVERFLOW TANK CAP (Sold With Tank)
12	1	8045591	RADIATOR CAP
13	1	8045592	THERMOSTAT
14	1	8044485	MUFFLER
15	1	8045594	AIR FILTER HOUSING
*	1	8041055	AIR FILTER ELEMENT (INNER)
*	1	8041054	AIR FILTER ELEMENT (OUTER)
16	1	8044243	SHEAVE, BLOWER 8.35"OD 2517 TL
	1	8042659	BUSHING, TL2517 1 7/16"
17	1	8041799	KEYWAY RETAINER
18	1	8044244	SHEAVE, WATERPUMP 3.95" OD QT 2-GROOVE
	1	8044245	BUSHING, 1 7/16" QT
*	1	8041053	FUEL FILTER
*	1	8045595	FUEL PUMP
*	1	T400106	RADIATOR DRAIN FITTING
*	1	8047370	BRACKET, WATER SEPARATOR
*	1	8047266	OIL / WATER SSEPARATOR
19	1	8030667-10	THROTTLE SOLENOID BRACKET
20	1	8030667	THROTTLE SOLENOID
21	1	8030667-1	RETURN SPRING
22	1	8046052	THROTTLE SOLENOID SPRING SWIVEL
23	2	8030667-5	JAM NUT
24	1	8030667-3	CLEVIS (INCLUDES PIN AND COTTER PIN)
25	1	8030667-11	THROTTLE SOLENOID BRACKET (VERTICAL)
26	1	8048024	AIR CLEANER RELOCATION MOUNTING PLATE
	4	U000420	SCREW, HC .375-16 X 1.00 ZP G5
	4	U120110	NUT, LOCK 3/8-16NY
	4	U200060	WASHER, FLAT .375 ZP
	4	U210060	WASHER, LOCK .375 ZP
27	1	8048486	AIR CLEANER INTAKE 99HP
28	1	8048266	EDGE GUARD, 67/99HP RELOCATION
*	1	X300299	CABLE BATTERY KIT 67-99HP WITH ELECT. HYD. PUMP
OPTION FOR JETTER			
*	1	8046698	GREASE BOLT SPACER
*	1	8046699	GREASE BOLT

* Not Shown

020113-E **VACASSY849**

Engine Kubota V3800T

Boom/ Aux. Hyd.

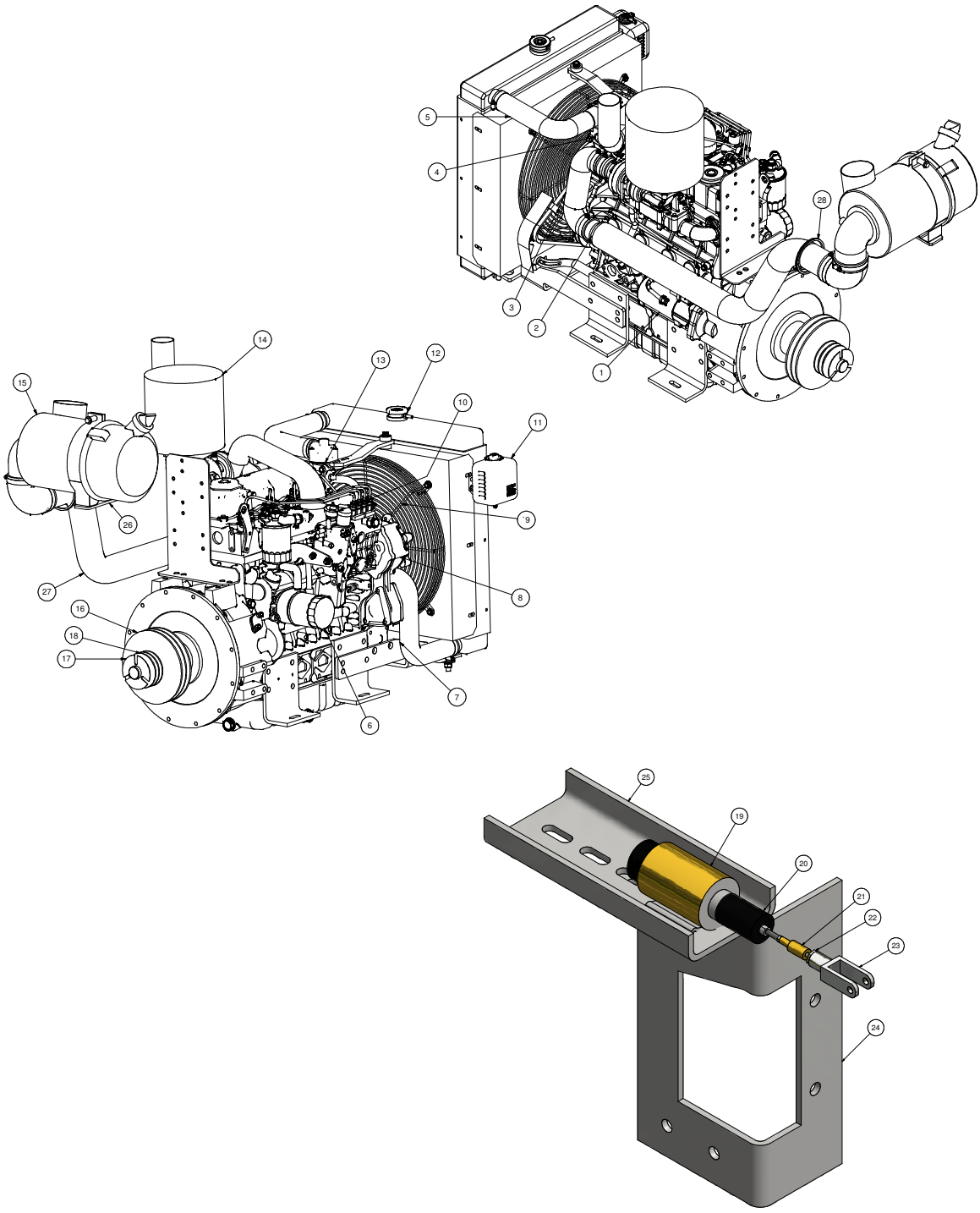

020113-E

VACASSY01803

Engine Kubota V3800T

Boom/ Aux. Hyd.

ITEM	QTY	NUMBER	DESCRIPTION
	1	8045154	ENG, KUBOTA 99HP (Short SAE4 HSG)
1	1	8046034	STARTER
2	1	8030960	OIL PRESSURE SWITCH
3	1	8046035	FAN BELT
4	1	8043952	WATER TEMPERTURE SWITCH
5	1	8045585	UPPER RADIATOR HOSE
6	1	8032002	OIL FILTER
7	1	8045586	LOWER RADIATOR HOSE
8	1	8046036	ALTERNATOR
9	1	8045588	FAN
10	1	8045589	FUEL SHUTOFF SOLENOID
11	1	8045590	OVERFLOW TANK
			OVERFLOW TANK CAP (Sold With Tank)
12	1	8045591	RADIATOR CAP
13	1	8045592	THERMOSTAT
14	1	8044485	MUFFLER
15	1	8045594	AIR FILTER HOUSING
*	1	8041055	AIR FILTER ELEMENT (INNER)
*	1	8041054	AIR FILTER ELEMENT (OUTER)
16	1	8044243	SHEAVE, BLOWER 8.35"OD 2517 TL
	1	8042659	BUSHING, TL2517 1 7/16"
17	1	8041799	KEYWAY RETAINER
18	1	8044244	SHEAVE, WATERPUMP 3.95" OD QT 2-GROOVE
	1	8044245	BUSHING, 1 7/16" QT
*	1	8041053	FUEL FILTER
*	1	8045595	FUEL PUMP
*	1	T400106	RADIATOR DRAIN FITTING
*	1	8047370	BRACKET, WATER SEPARATOR
*	1	8047266	OIL / WATER SSEPARATOR
19	1	8030667-10	THROTTLE SOLENOID BRACKET
20	1	8030667	THROTTLE SOLENOID
21	1	8030667-1	RETURN SPRING
22	1	8046052	THROTTLE SOLENOID SPRING SWIVEL
23	2	8030667-5	JAM NUT
24	1	8030667-3	CLEVIS (INCLUDES PIN AND COTTER PIN)
25	1	8030667-11	THROTTLE SOLENOID BRACKET (VERTICAL)
26	1	8048024	AIR CLEANER RELOCATION MOUNTING PLATE
	4	U000420	SCREW, HC .375-16 X 1.00 ZP G5
	4	U120110	NUT, LOCK 3/8-16NY
	4	U200060	WASHER, FLAT .375 ZP
	4	U210060	WASHER, LOCK .375 ZP
27	1	8048486	AIR CLEANER INTAKE 99HP
28	1	8048266	EDGE GUARD, 67/99HP RELOCATION
*	1	X300296	CABLE BATTERY KIT 67-99HP WITH NO ELECT. HYD. PUMP
OPTION FOR JETTER			
*	1	8046698	GREASE BOLT SPACER
*	1	8046699	GREASE BOLT

* Not Shown

020113-E

VACASSY01803

Blower Assembly 67HD

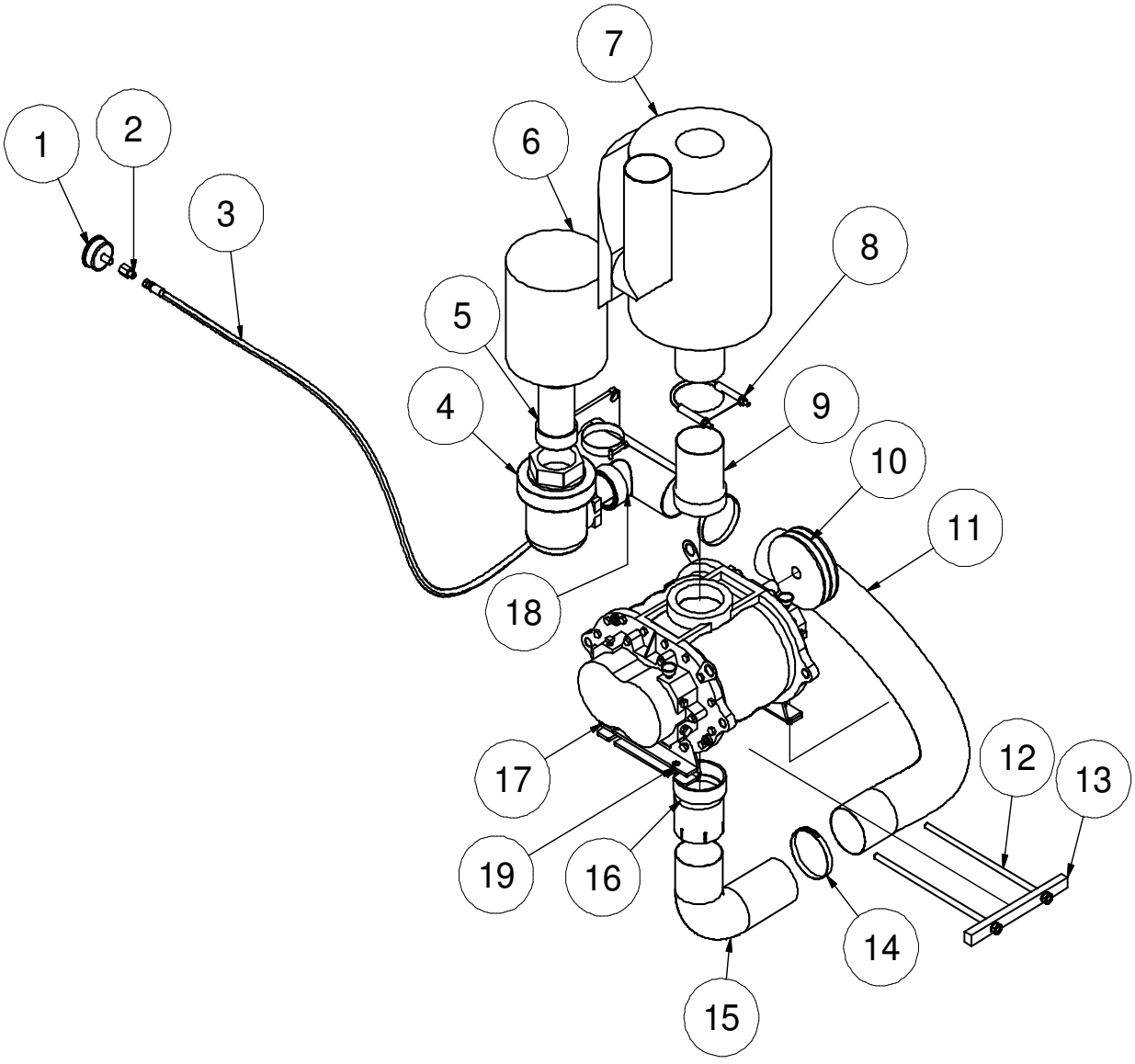

040513-E **VACASSY01204**

Blower Assembly 67HD

ITEM	QTY	NUMBER	DESCRIPTION
1	1	8041074	GAUGE COMPOUND PRESSURE/VACUUM
2	1	T400110	UNION, 4FP - 4MJ
3	1	8042355	HOSE ASSY VAC 4-60” ST-ST
4	1	8030866	BAYCO VALVE
5	1	8045238	UNION EXHAUST 3" OD-MNPT
6	1	8043553	AIR FILTER 3” 245CFM
7	1	8030917	SILENCER, 1025CFM, COWL
8	1	8031193	CLAMP, 4in U-BOLT EXHAUST
9	1	8045239	UNION EXHAUST 4” OD - MNPT
10	1	8040697	SHEAVE, 6.55DIA 2 - GROOVE
	1	8040485	BUSHING, 1 1/8” SDS
	1	U410090	KEY, 1/4” X 1/4” X 2 3/4”
	2	8049162	BELT, BP57
11	1	8046575	HOSE VAC AG SUCTION 4-51”
12	2	8041507	ROD TIGHTENER WELDMENT
13	1	8040904	TENSION BLOCK 1025 CFM
14	2	8042606	CLAMP T-BOLT 4” (450)
15	1	8041814	ELBOW, 4” (4.5” RAD, OD-OD)
16	1	8046820	ADAPTER 4”MNPT - 4”ID
17	1	8040001	BLOWER (MODEL 59)
	4	U000817	SCREW, HC 1/2” - 13 X 1”
	4	U210100	WASHER, LOCK 1/2”
	4	U200100	WASHER, FLAT 1/2”
18	1	8046415	HEADER, AIR FILTER 1025
	1	8046191	GASKET, HEADER AIR FILTER
19	2	8045252	BLOWER BOLT PLATE

040513-E

VACASSY01204

Blower Assembly 67/99HP 1025CFM

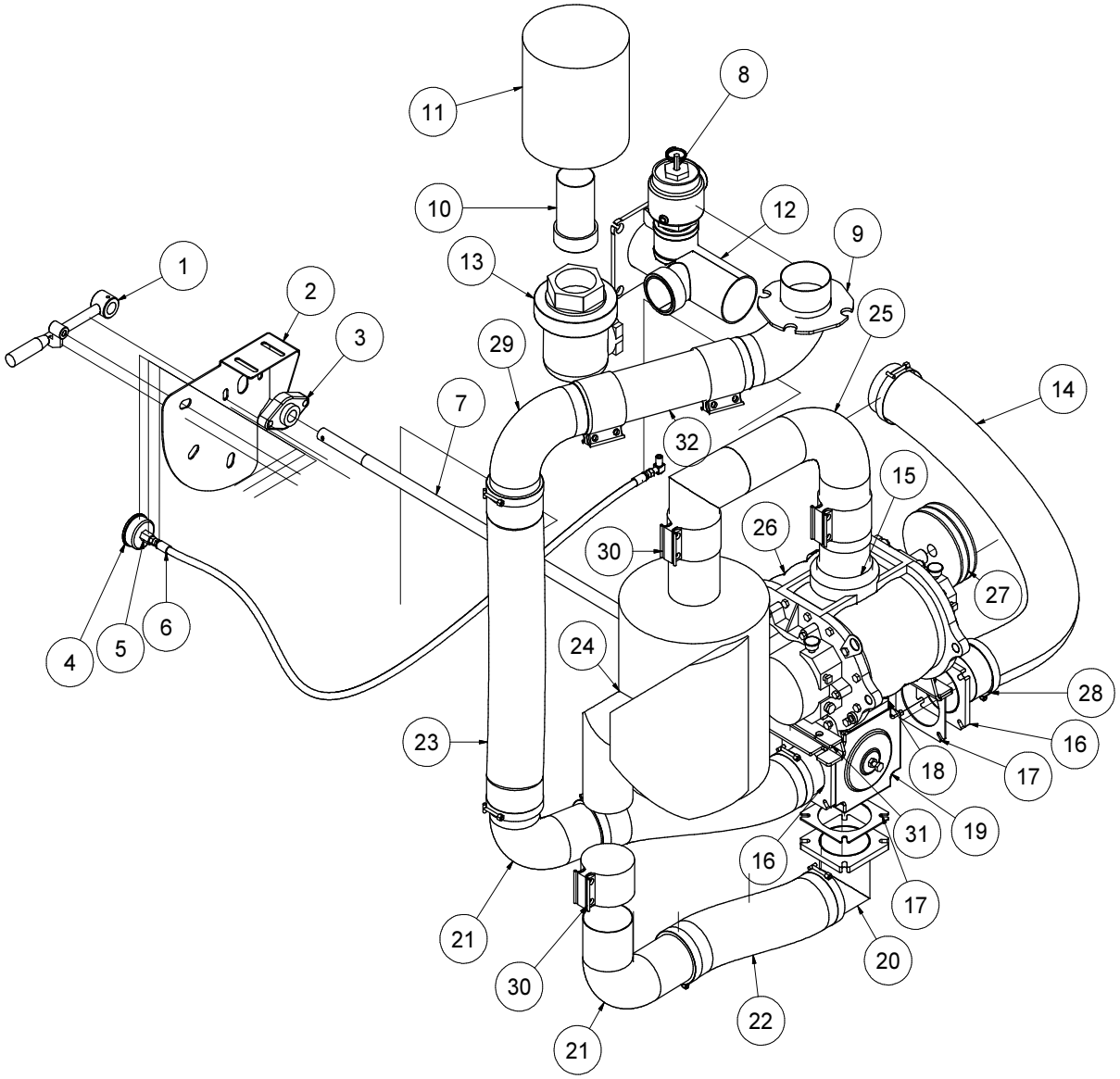

102615-E

VACASSY240

Blower Assembly 67/99HP 1025CFM

ITEM	QTY	NUMBER	DESCRIPTION
1	1	8041617	REVERSE FLOW HANDLE, TRAILER UNIT
	1	8041177-10	HANDLE GRIP
	1	8041595	PIN, SPRING REV FLOW HANDLE
2	1	8046202	BRACKET REV FLOW CONTROL LE
	3	8048585	GROMMET, .884/.878 X .266 X .234
3	1	W030080	FLANGE BEARING - 2 BOLT (1” BORE)
4	1	8041074	GAUGE COMPOUND PRESSURE/VACUUM
5	1	T400110	UNION 4FP-4MJ
6	1	8045869	HOSE ASSY VAC 4-34” ST-ST
7	1	8048342	REV FLOW UNIVERSAL JOINT RD SHAFT 49LE
8	1	8041035	PRESSURE RELIEF 1025
9	1	8092707	WELDMENT, REV FLOW EXHAUST 4”
10	1	8045238	UNION EXHAUST 3” OD-MNPT
11	1	8043553	AIR FILTER 3” 245 CFM
12	1	8048126	4” HEADER AIR FILTER HDRF
	1	8048127	HEADER, 4” AIR FILTER V2000/V2200
	1	8048128	HEADER,4” AIR FILTER V2600/V3000
	1	8046191	GASKET, HEADER
13	1	8030866	VALVE,3" AIR RELIEF SET 15"HG (STANDARD)
	1	8090438	VALVE,3" AIR RELIEF SET 13"HG (HIGH ALTITUDE)
14	1	8046575	HOSE VAC AG SUCTION 4 - 51”
15	1	8030560	4” HOSE COUPLING WELDMENT
16	2	8046484	EXHAUST REV FLOW 4” X 4” FLANGE WELDMENT
17	4	8043554	ADAPTER VALVE FLANGE
18	1	8044330	REV FLOW 4” HEADER NIP ASSY
19	1	8041177	4” 4-WAY VALVE
20	1	8093396	ELBOW EXHAUST 4” W/ 4” FLANGE
21	1	8046222	EXHAUST REV FLOW 3” X 4” FLANGE WELDMENT
22	1	8092929-016.25	HOSE VAC AG SUCTION 4 -16 1/4”
23	1	8092929-023.25	HOSE VAC AG SUCTION 4 - 23 1/4”
24	1	8030917	SILENCER, 1025 CFM, COWL
25	1	8046505	EXHAUST 4” ID-OD W/COUPLING WELDMENT
26	1	8040001	BLOWER (MODEL 59)
27	1	8044515	SHEAVE 7.75” OD SDS 2-GROOVE
	1	8044516	BUSHING 1 1/8” SD
	2	8049162	BELTS, BP57
	1	8041798	RETAINER
28	8	8042606	CLAMP HOSE T-BOLT 450
29	4	8042605	CLAMP HOSE T-BOLT 350
30	2	8030400	4” BAND CLAMP
31	2	8045252	BLOWER BOLT PLATE 59
32	1	8092338	PIPE, INLET
33	1	8092929-024.00	HOSE VAC AG SUCTION 4 -24 ”

102615-E

VACASSY240

Blower Assembly

67HD JETTER

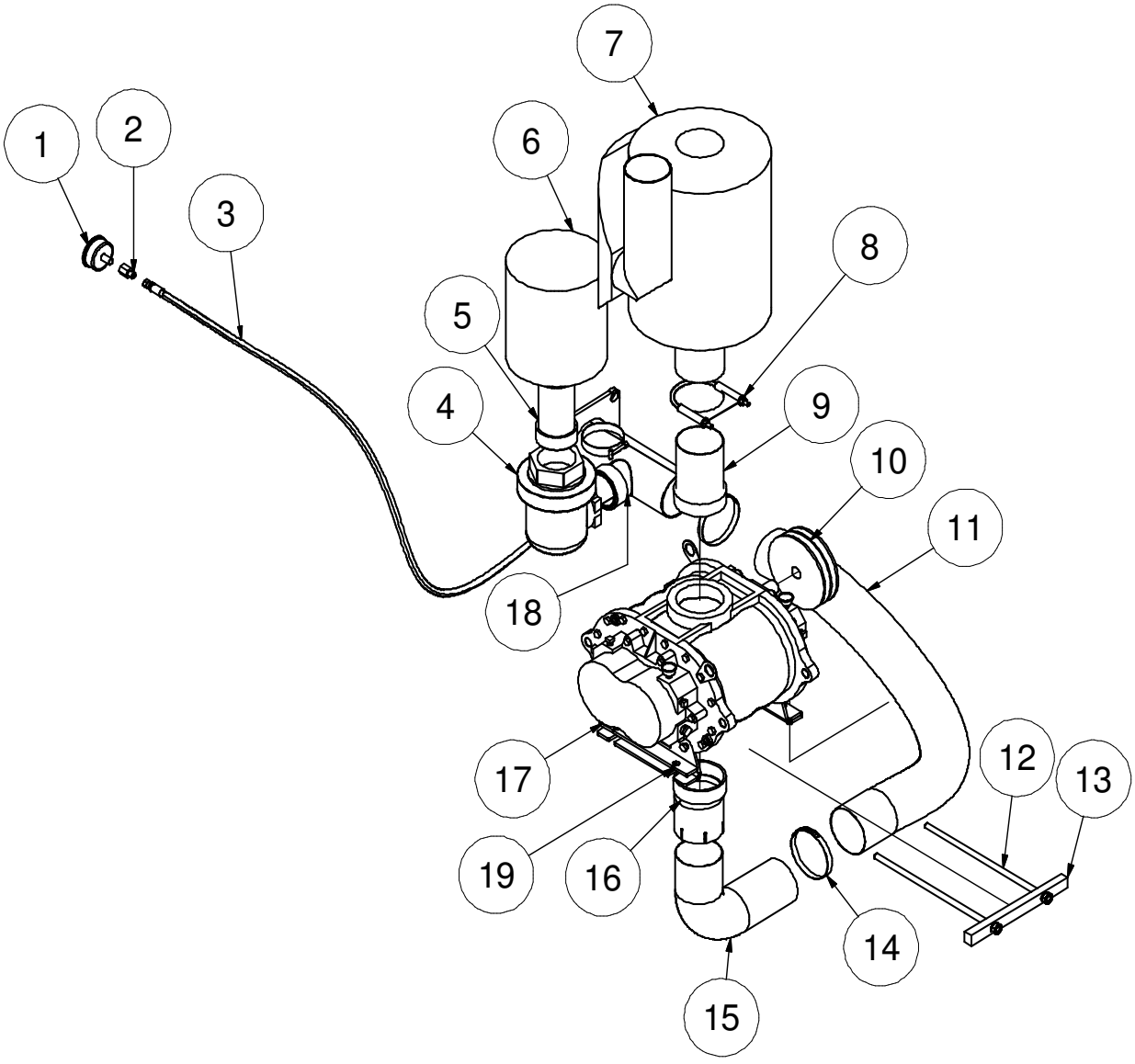

041113-E

VACASSY01205

Blower Assembly

67HD JETTER

ITEM	QTY	NUMBER	DESCRIPTION
1	1	8041074	GAUGE COMPOUND PRESSURE/VACUUM
2	1	T400110	UNION, 4FP - 4MJ
3	1	8042355	HOSE ASSY VAC 4-60” ST-ST
4	1	8030866	BAYCO VALVE
5	1	8045238	UNION EXHAUST 3" OD-MNPT
6	1	8043553	AIR FILTER 3” 245CFM
7	1	8030917	SILENCER, 1025CFM, COWL
8	1	8031193	CLAMP, 4in U-BOLT EXHAUST
9	1	8045239	UNION EXHAUST 4” OD - MNPT
10	1	8040697	SHEAVE, 6.55DIA 2 - GROOVE
	1	8040485	BUSHING, 1 1/8” SDS
	1	U410090	KEY, 1/4” X 1/4” X 2 3/4”
	2	8049160	BELT, BP52
11	1	8046575	HOSE VAC AG SUCTION 4-51”
12	2	8041507	ROD TIGHTENER WELDMENT
13	1	8040904	TENSION BLOCK 1025 CFM
14	2	8042606	CLAMP T-BOLT 4” (450)
15	1	8041814	ELBOW, 4” (4.5” RAD, OD-OD)
16	1	8046820	ADAPTER 4”MNPT - 4”ID
17	1	8040001	BLOWER (MODEL 59)
	4	U000817	SCREW, HC 1/2” - 13 X 1”
	4	U210100	WASHER, LOCK 1/2”
	4	U200100	WASHER, FLAT 1/2”
18	1	8046415	HEADER, AIR FILTER 1025
	1	8046191	GASKET, HEADER AIR FILTER
19	2	8045252	BLOWER BOLT PLATE

041113-E

VACASSY01205

Blower Assembly 67/99HP 1025CFM JETTER

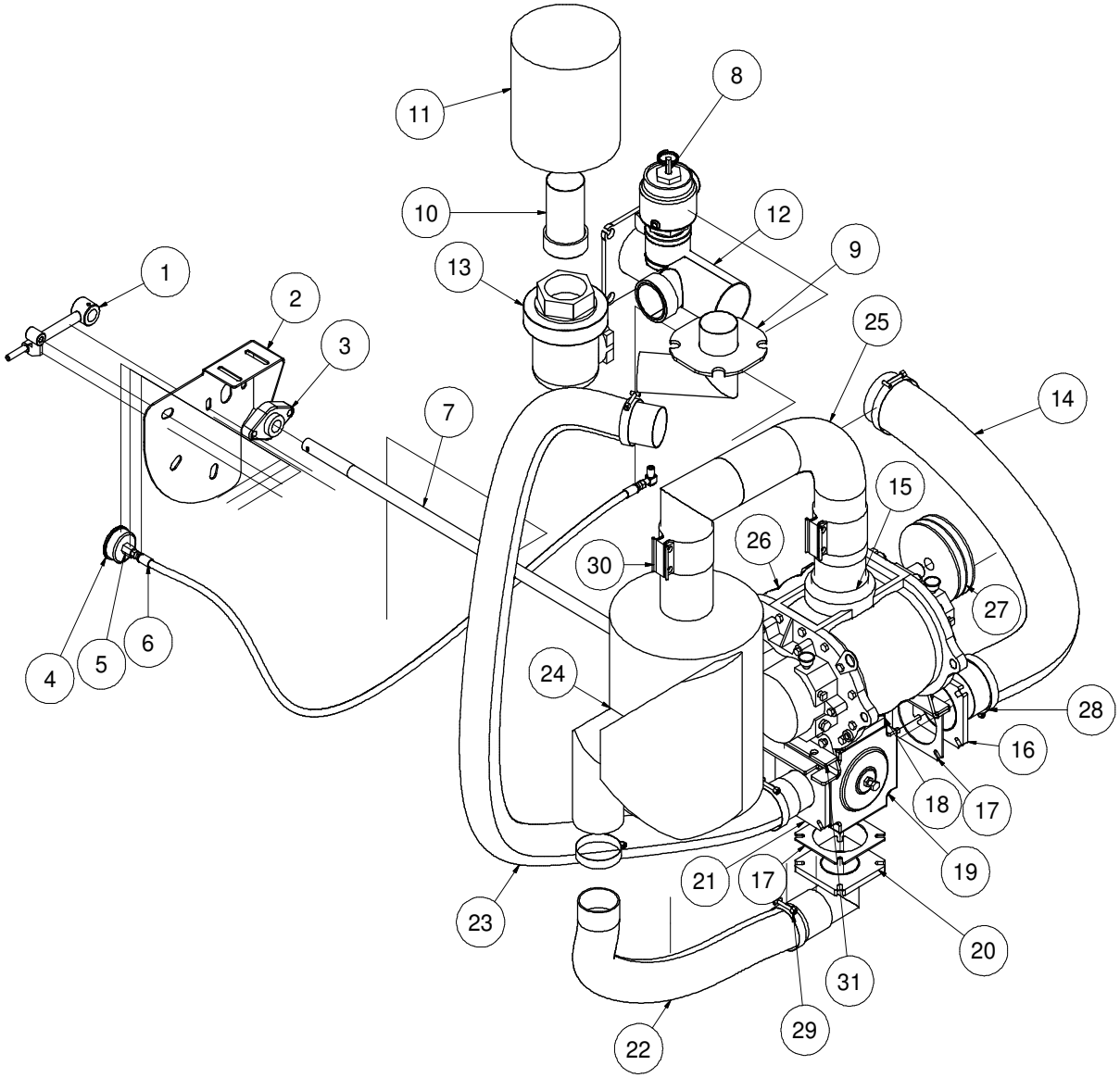

090815-E

VACASSY01203

Blower Assembly 67/99HP 1025CFM JETTER

ITEM	QTY	NUMBER	DESCRIPTION
1	1	8041617	REVERSE FLOW HANDLE, TRAILER UNIT
	1	8041177-10	HANDLE GRIP
	1	8041595	PIN, SPRING REV FLOW HANDLE
2	1	8046202	BRACKET REV FLOW CONTROL LE
	3	8048585	GROMMET, .884/.878 X .266 X .234
3	1	W030080	FLANGE BEARING - 2 BOLT (1” BORE)
4	1	8041074	GAUGE COMPOUND PRESSURE/VACUUM
5	1	T400110	UNION 4FP-4MJ
6	1	8045869	HOSE ASSY VAC 4-34” ST-ST
7	1	8048342	REV FLOW UNIVERSAL JOINT RD SHAFT 49LE
8	1	8041035	PRESSURE RELIEF 1025
9	1	8046218	EXHAUST REV FLOW PIPE WELDMENT
10	1	8045238	UNION EXHAUST 3” OD-MNPT
11	1	8043553	AIR FILTER 3” 245 CFM
12	1	8048126	4” HEADER AIR FILTER HDRF
	1	8048127	HEADER, 4” AIR FILTER V2000/V2200
	1	8048128	HEADER,4” AIR FILTER V2600/V3000
	1	8046191	GASKET, HEADER
13	1	8030866	VALVE,3" AIR RELIEF SET 15"HG (STANDARD)
	1	8090438	VALVE,3" AIR RELIEF SET 13"HG (HIGH ALTITUDE)
14	1	8046575	HOSE VAC AG SUCTION 4 - 51”
15	1	8030560	4” HOSE COUPLING WELDMENT
16	1	8046484	EXHAUST REV FLOW 4” X 4” FLANGE WELDMENT
17	4	8043554	ADAPTER VALVE FLANGE
18	1	8044330	REV FLOW 4” HEADER NIP ASSY
19	1	8041177	4” 4-WAY VALVE
20	1	8046201	ELBOW EXHAUST 3” W/ 4” FLANGE
21	1	8046222	EXHAUST REV FLOW 3” X 4” FLANGE WELDMENT
22	1	8092928-029.00	HOSE VAC AG SUCTION 3 - 29”
23	1	8092928-065.00	HOSE VAC AG SUCTION 3 - 65”
24	1	8030917	SILENCER, 1025 CFM, COWL
25	1	8046505	EXHAUST 4” ID-OD W/COUPLING WELDMENT
26	1	8040001	BLOWER (MODEL 59)
27	1	8040703	SHEAVE 6.15” OD SDS 2-GROOVE
	1	8040485	BUSHING 1 1/8” SDS
	2	8049160	BELTS, BP52
	1	8041798	RETAINER
28	2	8042606	CLAMP HOSE T-BOLT 450
29	4	8042605	CLAMP HOSE T-BOLT 350
30	2	8030400	4” BAND CLAMP

090815-E

VACASSY01203

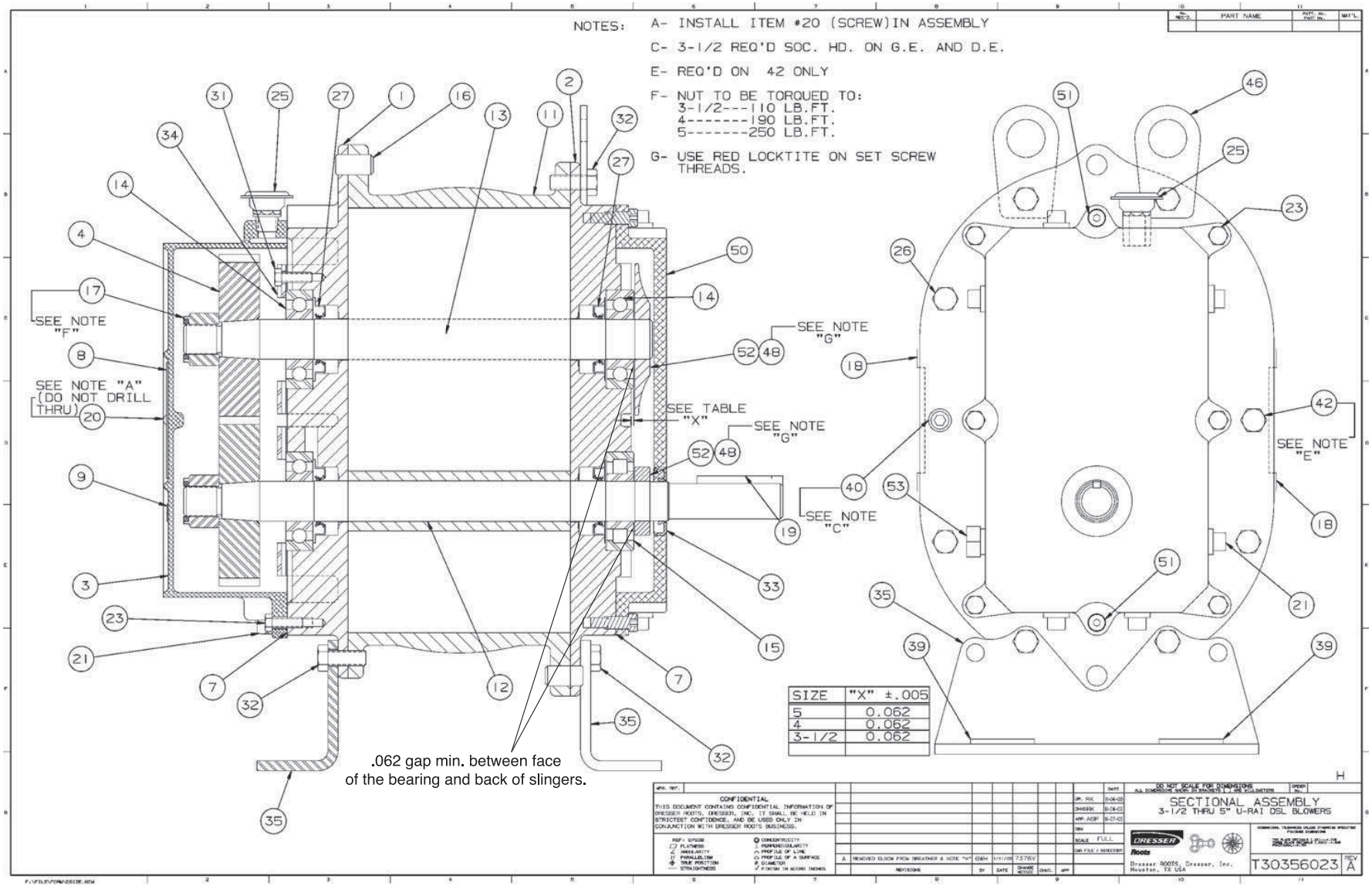

Assembly of URAI DSL Blowers with Splash Lubricated Drive End 3-5" Gear Diameter

URAI-DSL Splash Lubricated Blowers
4" Gear Diameter

Item #	Qty	Part #	Description
1	1	8041250-1	Headplate Gear End
2	1	8041250-2	Headplate Drive End
3	1	8041250-3	Gearbox
4	2	8041250-4	Timing Gears
7	1	8041250-7	Gasket, Gear Box, DE Cover
11	1	8041250-11	Cylinder
12	1	8041250-12	Impeller & Shaft Drive
13	1	8041250-13	Impeller & shaft Driven
14	3	8041250-14	Bearing, Ball
15	1	8041250-15	Bearing, Roller
16	4	8041250-16	Pin, Dowel
17	2	8041250-17	Gear Nut
19	1	8041250-19	Key
21	3	8041250-21	Plug, Pipe
23	6	8041250-23	Screw Hex
25	1	8041250-25	Breather (Plug Vent)
26	*	8041250-26	Screw, Hex
27	4	8041250-27	Seal, Lip Bearing
31	4	8041250-31	Screw, Hex, Nylock
32	6	8041250-32	Screw, Hex
33	1	8041250-33	Seal Lip-Drive
34	2	8041250-34	Clamp Plate
35	2	8041250-35	Foot
39	4	8041250-39	Washer Mounting
40	2	8041250-40	Screw Socket
42	2	8041250-42	Screw Hex
48	4	8041250-48	DE Oil Slinger Set Screw
50	1	8041250-50	Drive End Cover
52	2	8041250-52	Drive End Oil Slinger
53	2	8041250-53	Oil Sight Glass

*Quantities vary by blower.

Blower Assembly XT

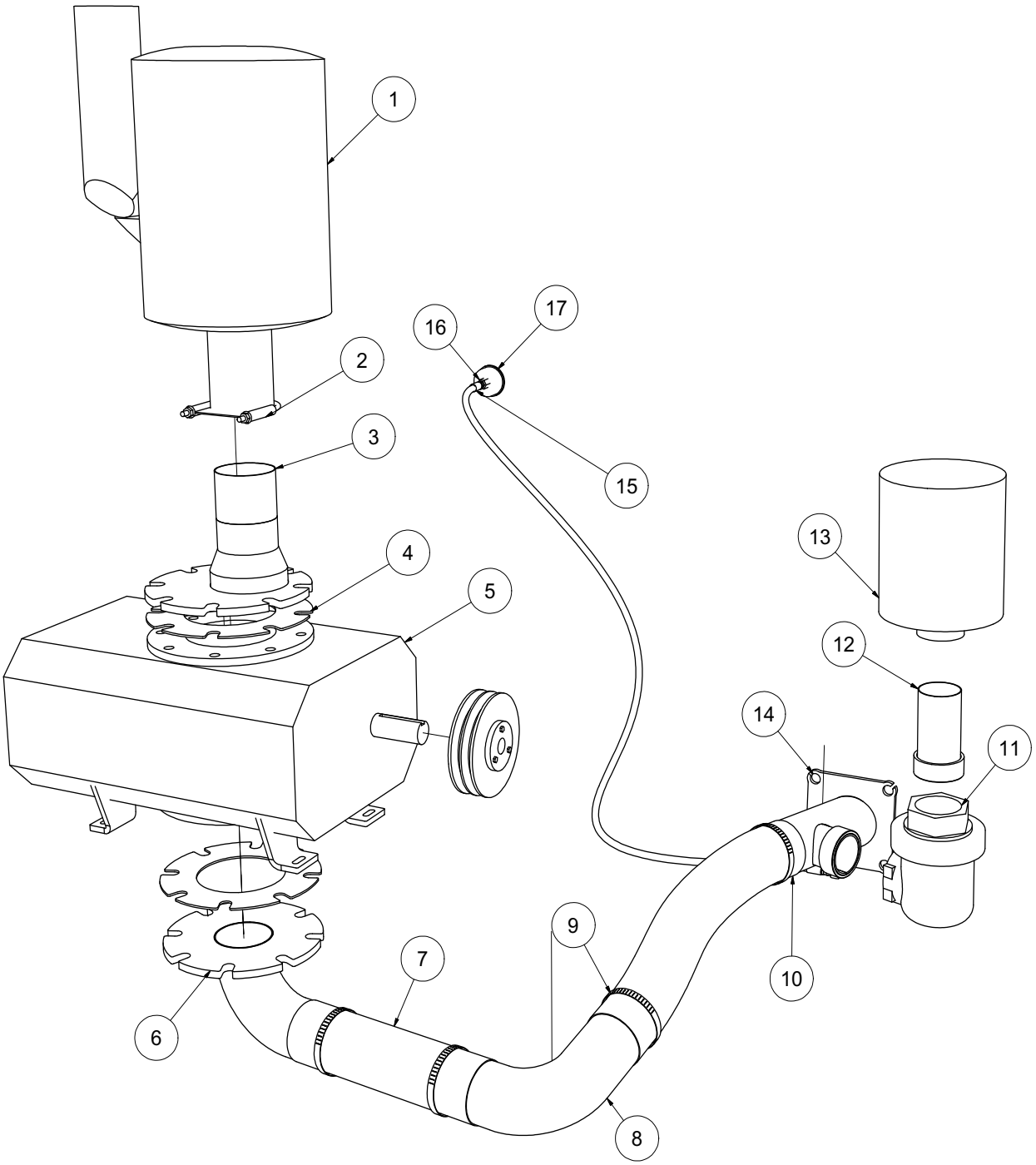

040513-E

VACASSY239

Blower Assembly XT

ITEM	QTY	NUMBER	DESCRIPTION
1	1	8030917	SILENCER, 1025CFM, COWL
2	1	8031193	CLAMP, 4” U-BOLT EXHAUST
3	1	8047063	EXHAUST 1200CFM BLOWER TOP
4	2	8046996	GASKET, BLOWER FLANGE ROOTS 412
5	1	8045164	412 BLOWER
	1	8045310	SHEAVE, 6.35”OD SD 3-GROOVE
	1	8045305	BUSHING, 1 1/2” SD
	2	8049066	BELT, BP55 GP
	2	8041507	TENSION ROD
	1	8047006	TENSION BLOCK
6	1	8047059	BLOWER FLANGE / ELBOW WELDMENT
7	1	8047065	HOSE VAC AG SUCTION 4-10”
8	1	8041814	ELBOW, 90 4” (4” RAD, OD-OD)
9	4	8042606	CLAMP, T-BOLT 4” (350)
10	1	8044511	HOSE VAC AG SUCTION 4-36”
11	1	8030866	BAYCO VALVE
12	1	8045238	UNION EXHAUST 3” OD - MNPT
13	1	8043553	AIR FILTER, 3” 245CFM
14	1	8046415	HEADER AIR FILTER HDRF
	1	8046191	HEADER GASKET
15	1	8045869	HOSE ASSY VAC 4 - 34” ST-ST
16	1	T400110	UNION, 4FP - 4MJ
17	1	8041074	GAUGE COMPOUND PRESSURE / VACUUM

040513-E

VACASSY239

Blower Assembly XTRF

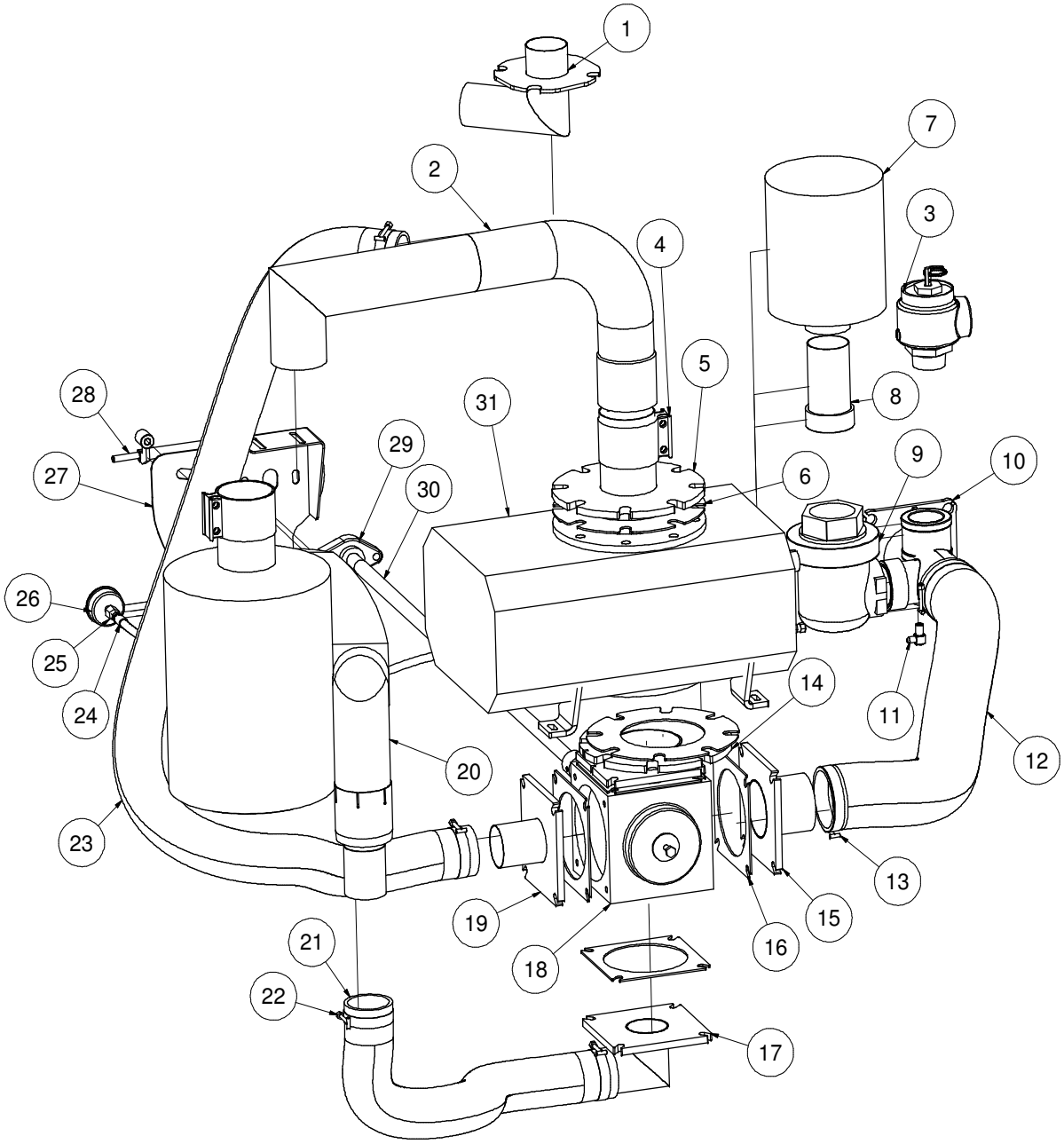

040513-E

VACASSY236

Blower Assembly XTRF

ITEM	QTY	NUMBER	DESCRIPTION
1	1	8046218	EXHAUST REV FLOW PIPE WELDMENT
2	1	8046986	EXHAUST 4” ID-OD W/ COUPLING WELDMENT
3	1	8041305	PRESSURE RELIEF 1025
4	2	8030400	4” BAND CLAMP
5	1	8046988	BLOWER OUTLET ROOTS 412
6	2	8046996	GASKET, BLOWER FLANGE ROOTS 412
7	1	8043553	AIR FILTER, 3” 245CFM
8	1	8045238	UNION EXHAUST 3” OD-MNPT
9	1	8030866	BAYCO VALVE
10	1	8048126	4” HEADER AIR FILTER HDRF
	1	8048127	HEADER,4" AIR FILTER V2000/V2200
	1	8048128	HEADER,4" AIR FILTER V2600/3000
	1	8046191	GASKET, HEADER
11	1	T401100	ELBOW, 4MP - 4MJ 90
12	1	8046575	HOSE VAC AG SUCTION 4-51”
13	2	8042606	CLAMP, T-BOLT 4” (350)
14	1	8048089	BRACKET REV FLOW BLOWER TO 4-WAY VALVE
15	1	8046984	FLANGE EXHAUST 4-WAY 6” X 4” TUBE
16	4	8046995	GASKET, FLANGE 4-WAY VALVE 6”
17	1	8046981	ELBOW EXHAUST 90 3” W/ FLANGE
18	1	8045829	VALVE, 4-WAY 6”
19	1	8046985	FLANGE EXHAUST 4-WAY 6” X 3” TUBE
20	1	8030917	SILENCER, 1025CFM, COWL
21	1	8046576	HOSE VAC AG SUCTION 3-65”
22	2	8042605	CLAMP T-BOLT 3” (350)
23	1	8046577	HOSE VAC AG SUCTION 4-34”
24	1	8045869	HOSE ASSY VAC 4-34” ST-ST
25	1	8030483	UNION, 4FP - 4MJ
26	1	8041074	GAUGE, VACUUM COMPOUND PRESSURE
27	1	8046202	BRACKET, REV FLOW CONTROL LE
	3	8048585	GROMMET, .884/.878 X .266 X .234
28	1	8041617	REV. FLOW HANDLE, TRAILER UNIT
29	1	W030080	FLANGE BEARING - 2 BOLT (1” BORE)
30	1	8048342	REV FLOW UNIVERSAL JOINT RD SHAFT 49LE
31	1	8045164	412 BLOWER ASSY
	1	8045310	SHEAVE, 6.35”OD SD 3-GROOVE
	1	8045305	BUSHING, 1 1/2” SD
	2	8049066	BELT, BP55 GP
*	2	8041507	TENSION ROD
*	1	8047006	TENSION BLOCK

* NOT SHOWN

040513-E

VACASSY236

Blower Assembly

XT (JETTER)

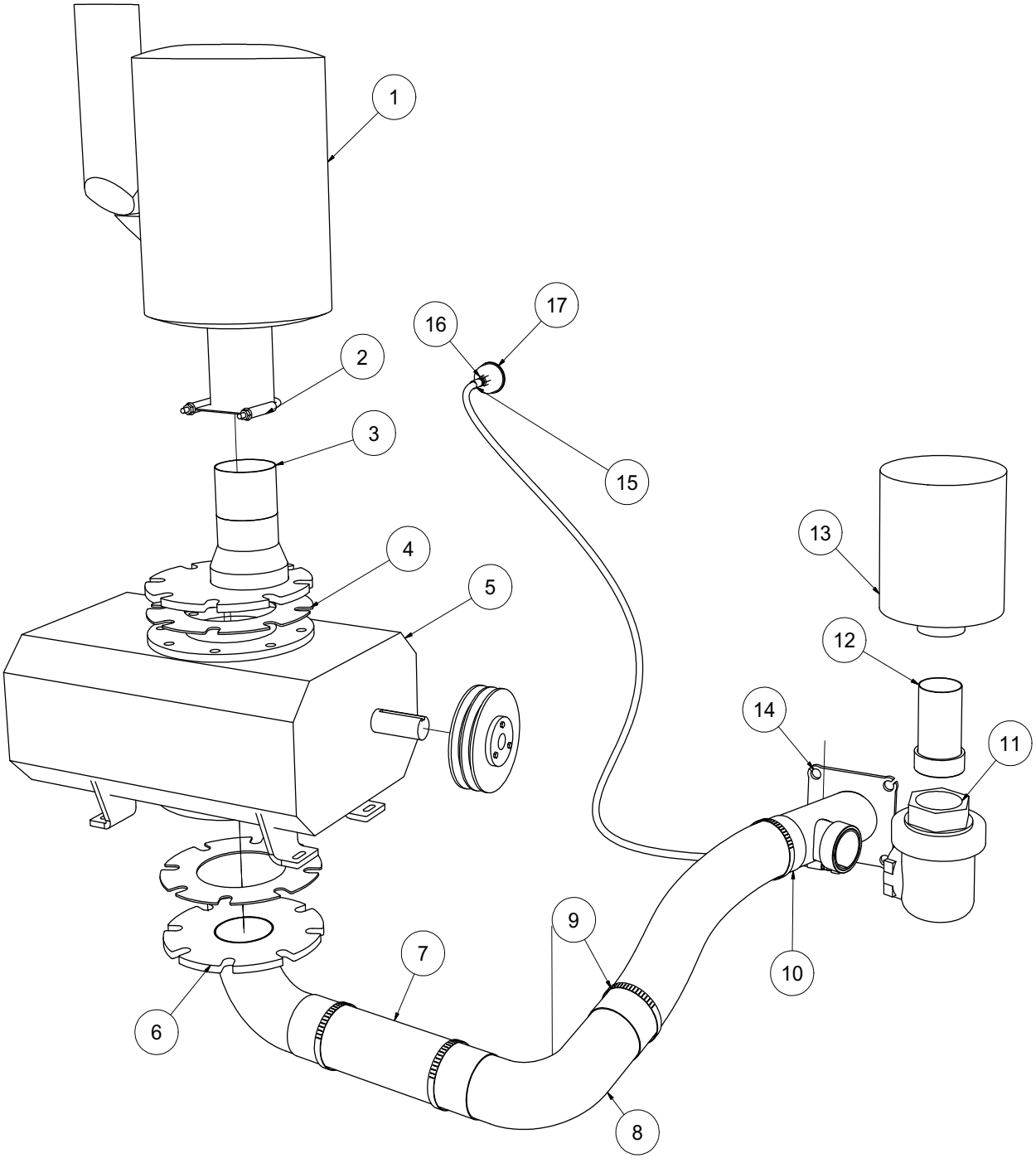

040513-E

VACASSY01201

Blower Assembly

XT (JETTER)

ITEM	QTY	NUMBER	DESCRIPTION
1	1	8030917	SILENCER, 1025CFM, COWL
2	1	8031193	CLAMP, 4" U-BOLT EXHAUST
3	1	8047063	EXHAUST 1200CFM BLOWER TOP
4	2	8046996	GASKET, BLOWER FLANGE ROOTS 412
5	1	8045164	412 BLOWER
	1	8045310	SHEAVE, 6.35"OD SD 3-GROOVE
	1	8045305	BUSHING, 1 1/2" SD
	2	8049070	BELT, BP51 GP (JETTER UNIT ONLY)
	2	8041507	TENSION ROD
	1	8047006	TENSION BLOCK
6	1	8047059	BLOWER FLANGE / ELBOW WELDMENT
7	1	8047065	HOSE VAC AG SUCTION 4-10"
8	1	8041814	ELBOW, 90 4" (4" RAD, OD-OD)
9	4	8042606	CLAMP, T-BOLT 4" (350)
10	1	8044511	HOSE VAC AG SUCTION 4-36"
11	1	8030866	BAYCO VALVE
12	1	8045238	UNION EXHAUST 3" OD - MNPT
13	1	8043553	AIR FILTER, 3" 245CFM
14	1	8046415	HEADER AIR FILTER HDRF
	1	8046191	HEADER GASKET
15	1	8045869	HOSE ASSY VAC 4 - 34" ST-ST
16	1	T400110	UNION, 4FP - 4MJ
17	1	8041074	GAUGE COMPOUND PRESSURE / VACUUM

040513-E

VACASSY01201

Blower Assembly

XTRF JETTER

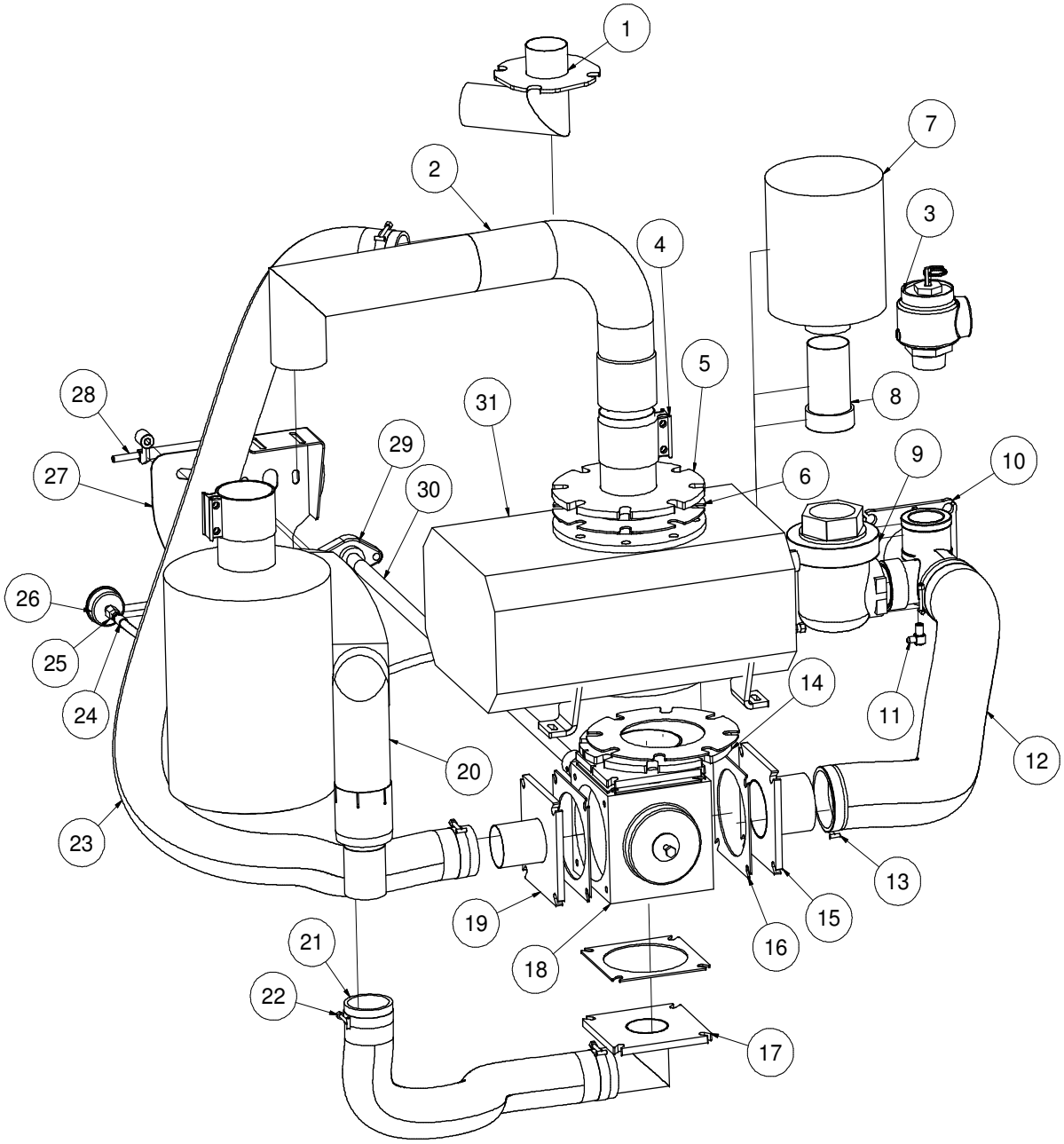

040513-E

VACASSY01202

Blower Assembly

XTRF JETTER

ITEM	QTY	NUMBER	DESCRIPTION
1	1	8046218	EXHAUST REV FLOW PIPE WELDMENT
2	1	8046986	EXHAUST 4” ID-OD W/ COUPLING WELDMENT
3	1	8041305	PRESSURE RELIEF 1025
4	2	8030400	4” BAND CLAMP
5	1	8046988	BLOWER OUTLET ROOTS 412
6	2	8046996	GASKET, BLOWER FLANGE ROOTS 412
7	1	8043553	AIR FILTER, 3” 245CFM
8	1	8045238	UNION EXHAUST 3” OD-MNPT
9	1	8030866	BAYCO VALVE
10	1	8048126	4” HEADER AIR FILTER HDRF
	1	8048127	HEADER,4" AIR FILTER V2000/V2200
	1	8048128	HEADER,4" AIR FILTER V2600/3000
	1	8046191	GASKET, HEADER
11	1	T401100	ELBOW, 4MP - 4MJ 90
12	1	8046575	HOSE VAC AG SUCTION 4-51”
13	2	8042606	CLAMP, T-BOLT 4” (350)
14	1	8048089	BRACKET REV FLOW BLOWER TO 4-WAY VALVE
15	1	8046984	FLANGE EXHAUST 4-WAY 6” X 4” TUBE
16	4	8046995	GASKET, FLANGE 4-WAY VALVE 6”
17	1	8046981	ELBOW EXHAUST 90 3” W/ FLANGE
18	1	8045829	VALVE, 4-WAY 6”
19	1	8046985	FLANGE EXHAUST 4-WAY 6” X 3” TUBE
20	1	8030917	SILENCER, 1025CFM, COWL
21	1	8046576	HOSE VAC AG SUCTION 3-65”
22	2	8042605	CLAMP T-BOLT 3” (350)
23	1	8046577	HOSE VAC AG SUCTION 4-34”
24	1	8045869	HOSE ASSY VAC 4-34” ST-ST
25	1	8030483	UNION, 4FP - 4MJ
26	1	8041074	GAUGE, VACUUM COMPOUND PRESSURE
27	1	8046202	BRACKET, REV FLOW CONTROL LE
	3	8048585	GROMMET, .884/.878 X .266 X .234
28	1	8041617	REV. FLOW HANDLE, TRAILER UNIT
29	1	W030080	FLANGE BEARING - 2 BOLT (1” BORE)
30	1	8048342	REV FLOW UNIVERSAL JOINT RD SHAFT 49LE
31	1	8045164	412 BLOWER ASSY
	1	8045310	SHEAVE, 6.35”OD SD 3-GROOVE
	1	8045305	BUSHING, 1 1/2” SD
	2	8049070	BELT, BP51 GP (JETTER UNIT ONLY)
*	2	8041507	TENSION ROD
*	1	8047006	TENSION BLOCK

* NOT SHOWN

040513-E

VACASSY01202

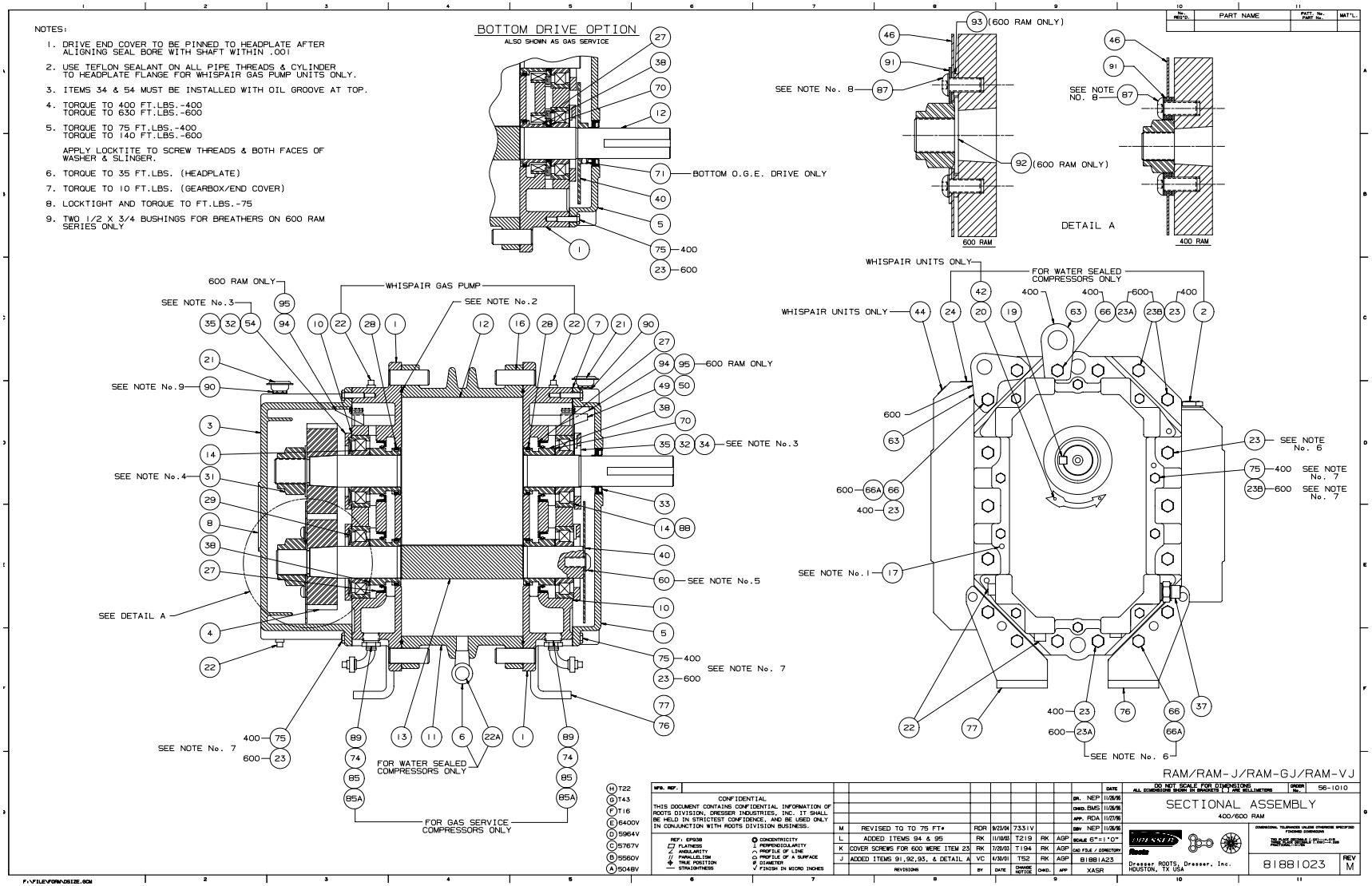

ASSEMBLY OF RAM SERIES -AIR & GAS BLOWERS

RAM™ SERIES PARTS LIST
4" & 6" GEAR DIAMETER

(Refer to drawing #81881023)

Item #	Part Name	Qty.
1	Headplate	2
3	Gearbox	1
4	Timing Gears	2
5	End Cover	1
7	Gasket – Gearbox/Cover	2
10	Shims	Lot
11	Cylinder	1
12	Impeller & Shaft Drive	1
13	Impeller & Shaft Driven	1
14	Bearing Roller	4
16	Pin, Dowel (Pull Out)	4
17	Pin, Dowel	2
19	Key Square	1
21	Breather	2
22	Plug, Pipe	12
23	Screw, Cap Hex Hd.	*
27	Seal, Ben Binh.	4
28	Piston, Ring-Seal	4
29	Washer, Wavy Spring	2
31	Gear Nut	2
32	Scr, Cap Hex Hd.	16
33	Seal, Lip Drive	1
34	Brg. Clamp Plate - D. E.	2
35	Lock Washer - Spring	16
37	Sight Plug - Oil Level	2
38	Sleeve, Shaft	4
40	Slinger - D.E. (Top Drive)	1
46	Slinger - G.E. (Optional)	1
49	Oil Leader L/S	1
50	Oil, Leader-R/S	1
54	Brg Clamp Plate - G. E.	2
60	Screw, Cap Butt. HD.	1
64	Pin, Spring	1
66	Screw, Cap Hex HD.	*
66.1	Whispair, Spring Lock 3/8M	*
70	Shims D.E. Brg.	1
75	Screw, Cap - Hex HD.	*
76	Blower Foot - RH	2
77	Blower Foot - LH	2
85	Elb, Pipe-Black	2
85.1	Plug, Pipe	2
87	Scr, Cap BH	2
88	Anti Rotation Ball	4
90	BSHG-RDCG	2
91	Washer, Plain Flat	2
92	Washer, Plain Flat	2
93	Washer	2

*Quantity varies by blower.

Water Pump Assembly TS2021

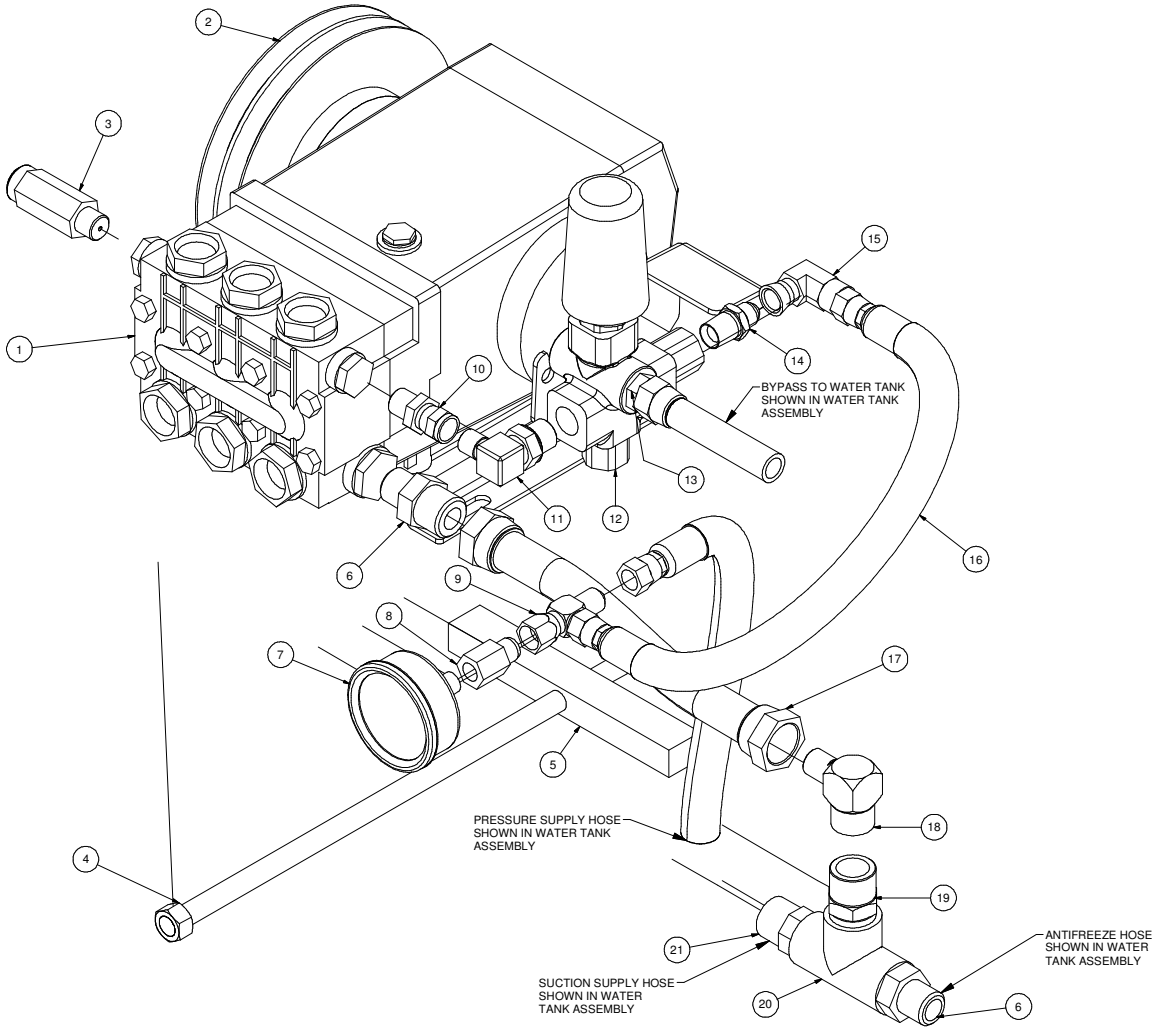

030713-E **VACASSY302**

Water Pump Assembly TS2021

ITEM	QTY	PART NO.	DESCRIPTION
1	1	8031279	WATER PUMP
	4	U000420	SCREW, HC 3/8"-16 X 1"
	4	U210060	WASHER, LOCK 3/8"
	4	U200600	WASHER, FLAT 3/8"
2	1	8030961	WATER PUMP CLUTCH
	1	U410094	KEY 5/16" X 5/16" X 1 3/8"
3	1	8030340	SAFETY RELIEF VALVE 6GPM
4	1	8040751	ROD TIGHTENER WELD'T
5	1	8040893	TENSIONER BLOCK, ADJUSTING
6	2	T400080	REDUCER, 12MP-8MJ
7	1	8030372	WATER PRESSURE GAUGE 1/4"NPT
8	1	8031126	REDUCER, 1/4"FP - 3/8"FJ
9	1	T402153	TEE, 6MJ - 6MJ - 6FJ
10	1	T401125	REDUCER, 3/8"MP - 1/2"FJ
11	1	T401120	ELBOW, 90 3/8"MP - 1/2"MJ
12	1	8040177	VALVE, UNLOADER PULSAR 3
13	1	T400030	REDUCER, 6MP - 8MJ
14	1	T400028	ADAPTER,STR 6MP - 6MJ, STEEL
15	1	T401228	ELBOW, 90 3/8"FJ - 3/8"MJ
16	1	8046817	HOSE ASSY VAC 6-32" ST-ST
17	1	8040972	HOSE VAC PUSH 12 - 8 1/2"LG
	2	8030525	FITTING, HOSE #12FJ PUSHLOCK
18	1	T401160	ELBOW,90 3/4"MJ - 1/2"MJ
19	1	T400080	REDUCER, 12MP - 8MJ
20	1	T402160	TEE, 3/4"FP - 3/4"FP - 3/4"FP
21	1	T400100	UNION, 12MP - 12MJ
*	2	8041803	BELT, AX 47 (67/73HP)
	2	8034157	BELT, AX 39 (36HP)
	2	8041082	BELT, AX 48 (99HP COMP 1025 CFM)
	2	8040878	BELT, AX 45 (49HP)

* NOT SHOWN

030713-E **VACASSY302**

Water Pump TS2021

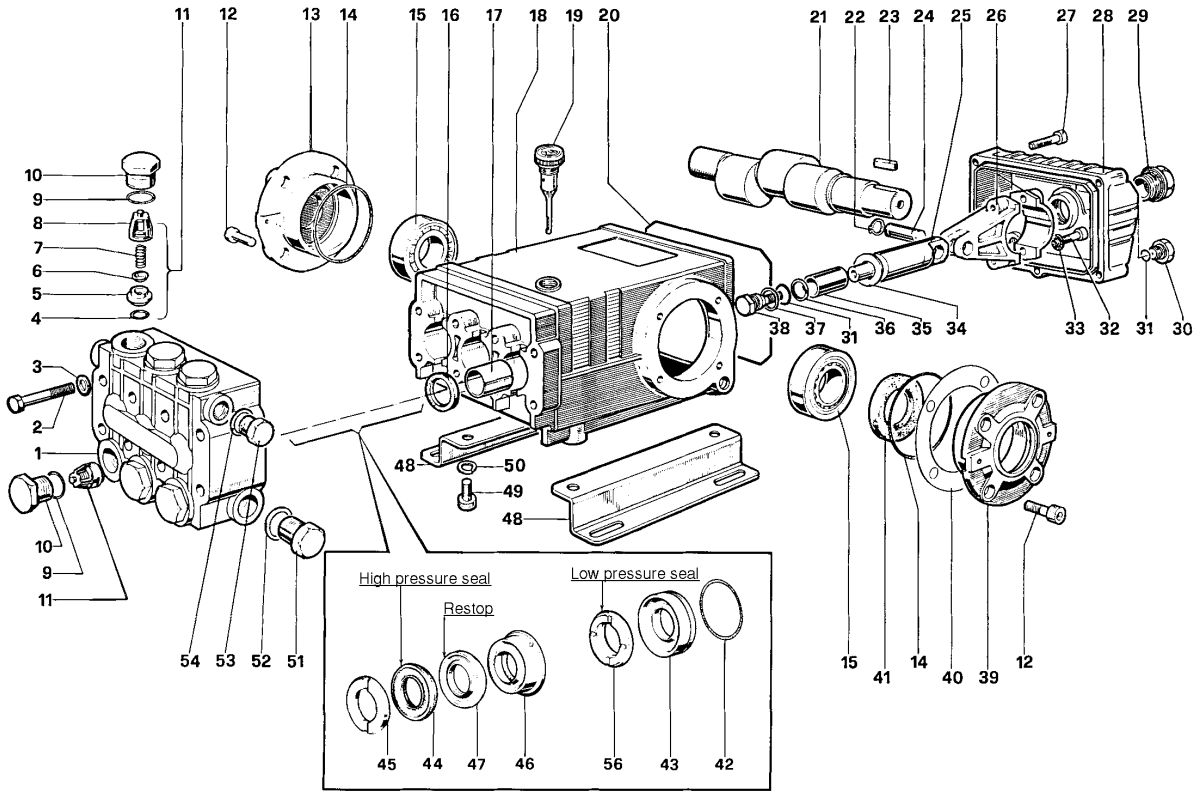

TORQUE SPECS*

*Decrease torque by 20%
if threads are lubricated

Position	Ft. Lbs.	N-M
2	22.1	29.9
10	73.7	99.9
12	14.7	19.2
27	7.3	9.9
29	13.2	17.9
30	14.7	19.2
32	14.7	19.2
38	14.7	19.2
49	29.4	39.8
51	29.4	39.8
53	29.4	39.8

Water Pump TS2021

ITEM	QTY.	PART #	DESCRIPTION
1	1	8031280-1	Manifold
2	8	8031280-2	Screw, M8 x 70
3	8	8031280-3	Washer, M8 x 4
4	8	8031280-4	O-ring, .674 x .103
5	6	8031280-5	Seat, Valve
6	6	8031280-6	Plate, Valve
7	6	8031280-7	Spring
8	6	8031280-8	Guide, Valve
9	6	8031280-9	O-ring,.797x.103
10	6	8031280-10	Cap
11	6	8031280-11	Valve Assembly
12	8	8031280-12	Screw, M8 x 16
13	1	8031280-13	Cover, Crankcase
14	2	8031280-14	O-ring, 2.675 x .103
15	2	8031280-15	Bearing, Roller
16	3	8031280-16	Seal, Oil
17	3	8031280-17	Bushing
18	1	8031280-18	Crankcase
19	1	8031280-19	Oil Dip Stick
20	1	8031280-20	O-ring, Cover
21	1	8031280-21	Crankshaft
22	6	8031280-22	Ring, Snap
23	1	8031280-23	Key
24	3	8031280-24	Pin, Wrist
25	3	8031280-25	Guide, Plunger
26	3	8031280-26	Rod, Connecting
27	5	8031280-27	Screw, M6 x 30
28	1	8031280-28	Cover, Crankcase
29	6	8031280-29	Oil Indicator
30	1	8031280-30	Cap
31	4	8031280-31	O-ring,.426x.070
32	6	8031280-32	Screw, M8 x 35
33	6	8031280-33	Washer, M8.4
34	3	8031280-34	Washer, M14
35	3	8031280-35	Plunger (20 mm)
37	3	8031280-37	Washer
38	3	8031280-38	Screw, Plunger
39	1	8031280-39	Cover, Crankcase
40	2	8031280-40	Shim
41	1	8031280-41	Seal, Oil
42	3	8031280-42	O-ring, 1.364x.070
43	3	8031280-43	Retainer, Packing
44	3	8031280-44	Packing
45	3	8031280-45	Ring, Head, M20
46	3	8031280-46	Intermed. Ring
47	3	8031280-47	Testop Ring
48	2	8031280-48	Pump Feet
49	4	8031280-49	Screw, M10 x 18
50	4	8031280-50	Washer, M10.2
51	1	8031280-51	Cap
52	1	8031280-52	Washer, M21.5
53	1	8031280-53	Cap
54	1	8031280-54	Washer, M17.5
56	3	8031280-56	Seal,Low Press,20mm

KIT #	ITEM #'S INCL'D IN KIT	NO. OF ASSY IN KIT	NO. OF CYL KIT WILL SERVICE
8031280-KIT1	4, 5, 6, 7, 8 (11)	6	3
8031280-KIT2	16	3	3
8031280-KIT3	41	2	0
8031280-KIT4	9, 10	6	3
8031280-KIT5	9, 10	6	3
8031280-KIT6	31, 34	3	3
	36, 37, 38		
8031280-KIT7	45	6	3
8031280-KIT10	42, 43	3	3
8031280-KIT28	42, 43, 44,	1	1
	45, 45, 47, 56		
8031280-KIT69	44, 47, 56	3	3
8031280-KIT71	46, 47	3	3

VACASSY325

Water Pump Assembly

TSP1821
5.5GPM
5000PSI

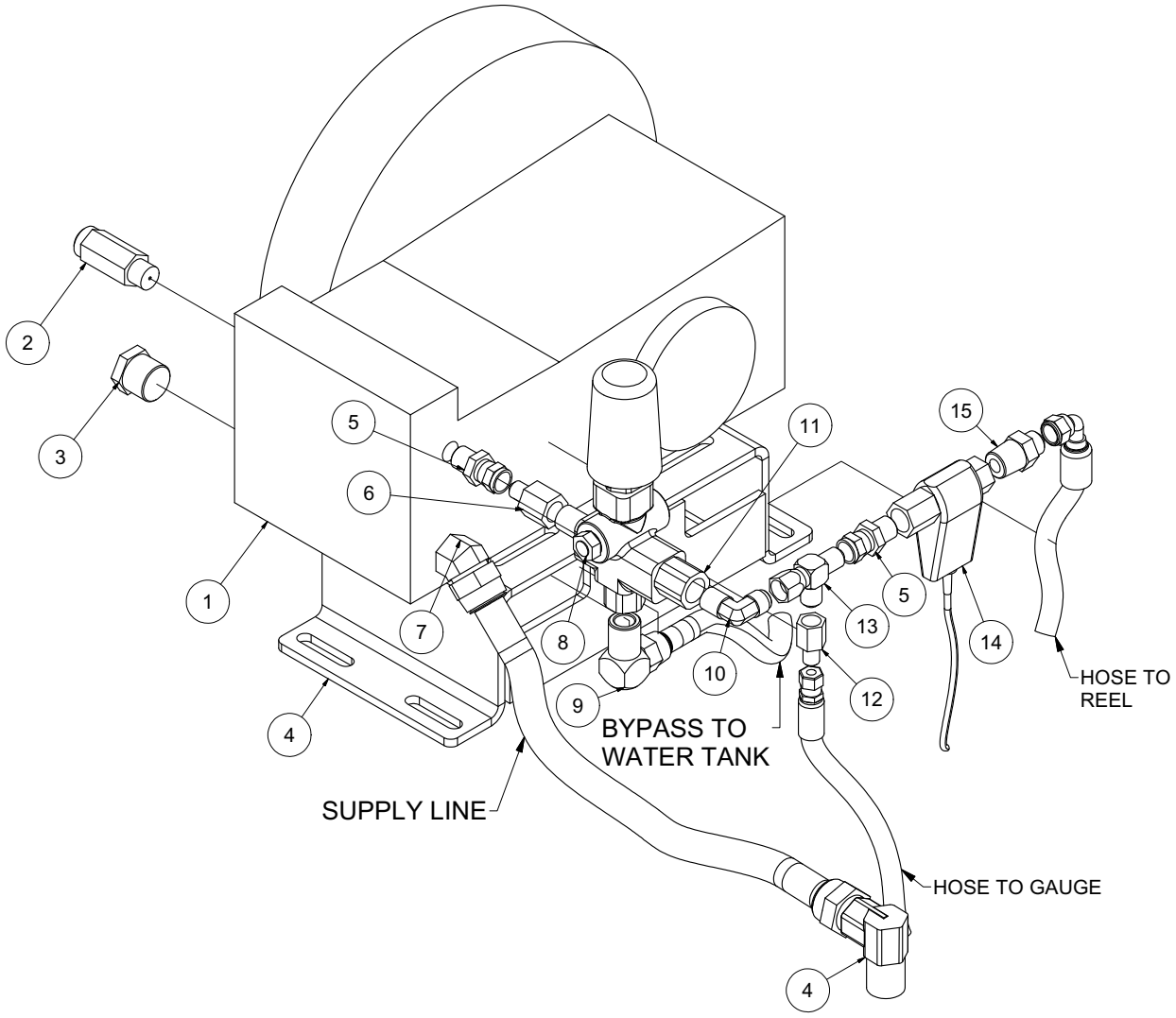

040813-E

VACASSY333

Water Pump Assembly

TSP1821 5.5GPM 5000PSI

ITEM	QTY	PART NO.	DESCRIPTION
		8048161	WATER PUMP TSP1821 5.5GPM W/CLUTCH
1	1	8047240	PUMP, WATER TSP1821
	1	8047241	CLUTCH, ELECTRIC
	2	8049163	BELT, BP59
	1	8047256	SHEAVE, 6.75"OD SDS 2GROOVE
2	1	8048391	VALVE, RELIEF 5500PSI
3	1	T405065	PLUG, #12MP
4	1	8047243	BRACKET, WATER PUMP TSP1821
5	2	T401125	REDUCER, 3/8"MP - 1/2"FJ
6	1	T400613	REDUCER, 1/2"MJ - 3/8"FP
7	1	T401561	ELBOW, 45 1/2"MP - 3/4"MJ
8	1	T405030	PLUG, 1/4"MP, HEX HEAD
9	1	T401140	ELBOW, 8MP - 8MJ
10	1	T401102	ELBOW, 3/8"MP - 3/8"MJ 90
11	1	8047242	VALVE, UNLOADER
12	1	T400022	REDUCER, 6FJ - 4MJ
13	1	T402153	TEE, 6MJ - 6MJ - 6FJ
14	1	8047724	FLOW SWITCH
15	1	T400028	UNION, 3/8"MP - 3/8"MJ

040813-E

VACASSY333

Water Pump TSP1821

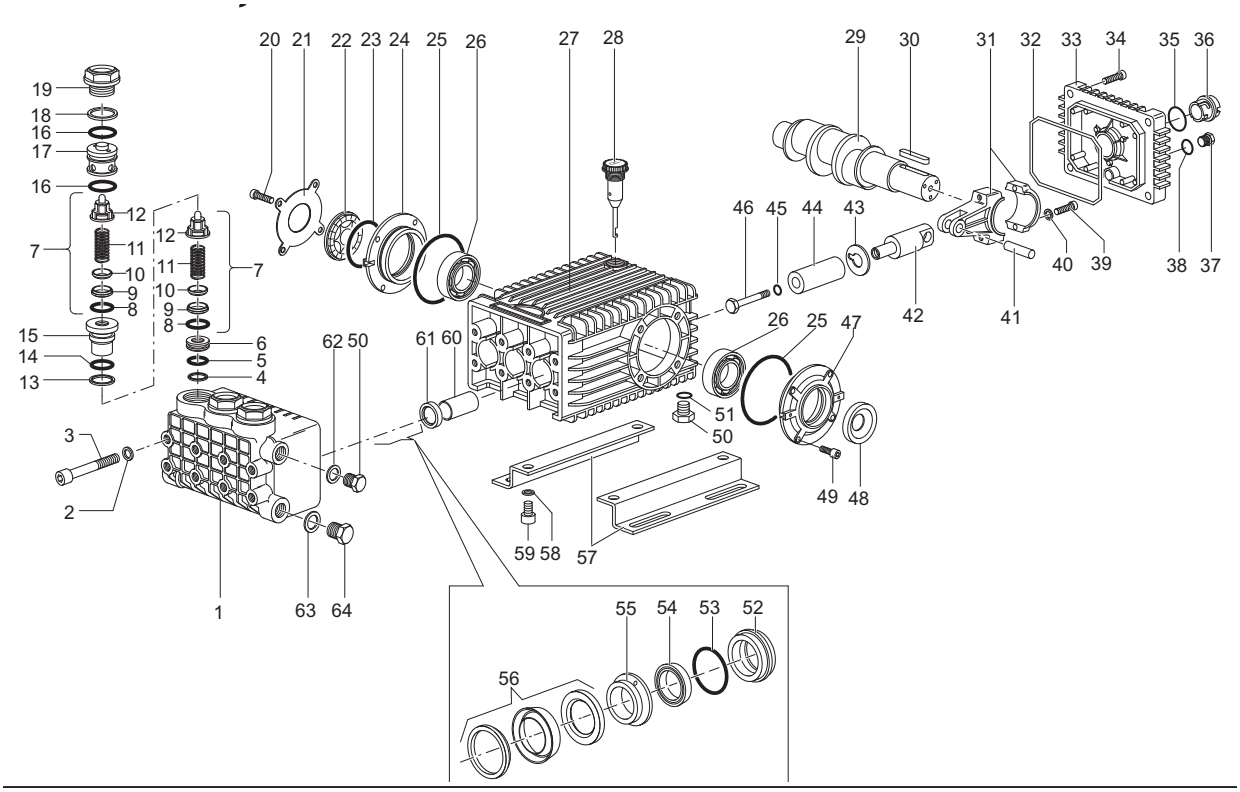

TORQUE SPECS*

Item	N-M	Ft-lbs
3	45	33.2
19	130	95.9
20	20	14.8
34	10	7.4
37	20	14.8
39	20	14.8
46**	20	14.8
49	20	14.8
50	40	29.5
59	40	29.5
** Use Loc-tite 542		

Water Pump TSP1821

ITEM	QTY.	PART #	DESCRIPTION
1	1	8047240-1	MANIFOLD
2	8	8047240-2	WASHER, M10
3	8	8047240-3	HEADBOLT M10 X 120
4	3	8047240-4	ANTI-EXT RING
5	3	8047240-5	O-RING 18.77 X 1.78
6	3	8047240-6	SPACER, M12
7	6	8047240-7	VALVE, ASSY
8	6	8047240-8	O-RING 18.77 X 1.78
9	6	8047240-9	VALVE SEAT
10	6	8047240-10	VALVE POPPET
11	6	8047240-11	VALVE SPRING
12	6	8047240-12	VALVE GUIDE
13	3	8047240-13	ANTI-EXT RING
14	3	8047240-14	O-RING 17.86 X 2.62
15	3	8047240-15	BUSHING
16	6	8047240-16	O-RING 23.81 X 2.62
17	3	8047240-17	PLUG, 19MM
18	3	8047240-18	ANTI-EXT RING
19	3	8047240-19	VALVE CAP
20	4	8047240-20	SCREW, M8 X 25
21	1	8047240-21	COVER
22	1	8047240-22	SPACER, SIGHTGLASS
23	1	8047240-23	O-RING 55.56 X 3.53
24	2	8047240-24	SIDE COVER
25	2	8047240-25	O-RING 67.95 X 2.62
26	1	8047240-26	BEARING
27	1	8047240-27	CRANKCASE
28	1	8047240-28	DIPSTICK, VENTED
29	1	8047240-29	CRANKSHAFT TSP1821
30	1	8047240-30	KEY
31	3	8047240-31	CONNECTING ROD
32	1	8047240-32	O-RING 133.02 X 2.62
33	1	8047240-33	COVER, CRANKCASE
34	4	8047240-34	SCREW, M6 X 20
35	1	8047240-35	O-RING 26.58 X 3.53
36	1	8047240-36	SIGHTGLASS BAYONET STYLE
37	1	8047240-37	PLUG, G 1/4" X 9
38	1	8047240-38	O-RING 10.82 X 1.78
39	6	8047240-39	SCREW M8 X 35
40	6	8047240-40	LOCKING WASHER M8
41	3	8047240-41	WRIST PIN
42	3	8047240-42	PISTON GUIDE
43	3	8047240-43	FLINGER WASHER
44	3	8047240-44	PLUNGER 18 X 54
45	3	8047240-45	O-RING 10.82 X 1.78
46	3	8047240-46	PLUNGER BOLT
47	1	8047240-47	SIDE COVER, PTO
48	1	8047240-48	SEAL SHAFT 30 X 55 X 7
49	4	8047240-49	SCREW M8 X 16
50	2	8047240-50	PLUG 3/8 X 13
51	1	8047240-51	O-RING 13.95 X 2.62
52	3	8047240-52	SEAL RETAINER
53	3	8047240-53	O-RING 34.65 X 1.78
54	3	8047240-54	LP SEAL
56	3	8047240-55	INTERMEDIATE RING

ITEM	QTY.	PART #	DESCRIPTION
57	2	8047240-57	PUMP RAIL
58	4	8047240-58	WASHER M10
59	4	8047240-59	SCREW M10 X 18
60	3	8047240-60	GUIDE BUSHING
61	3	8047240-61	SEAL, PL. ROD 22 X 32 X 5.5
62	1	8047240-62	GASKET, ALUMINUM 3/8"
63	1	8047240-63	GASKET, ALUMINUM 1/2"
64	1	8047240-64	PLUG, G1/2" X 10

KIT #	ITEM #'S INCL'D IN KIT	NO. OF ASSY IN KIT	NO. OF CYL KIT WILL SERVICE
8047240-K02	61	3	3
8047240-K03	48	1	0
8047240-K15066	8,9,10,11,12 11,12,13,14 16,18(7)	6	3
8047240-K174	54,56	3	3
8047240-K175	52,53,54,55,56	1	1
8047240-K180	54,56	3	3
8047240-K176	52,53,54,55,56	1	1

061411-E

VACASSY335

Water Pump Assembly

TSF2021
8GPM
3600PSI

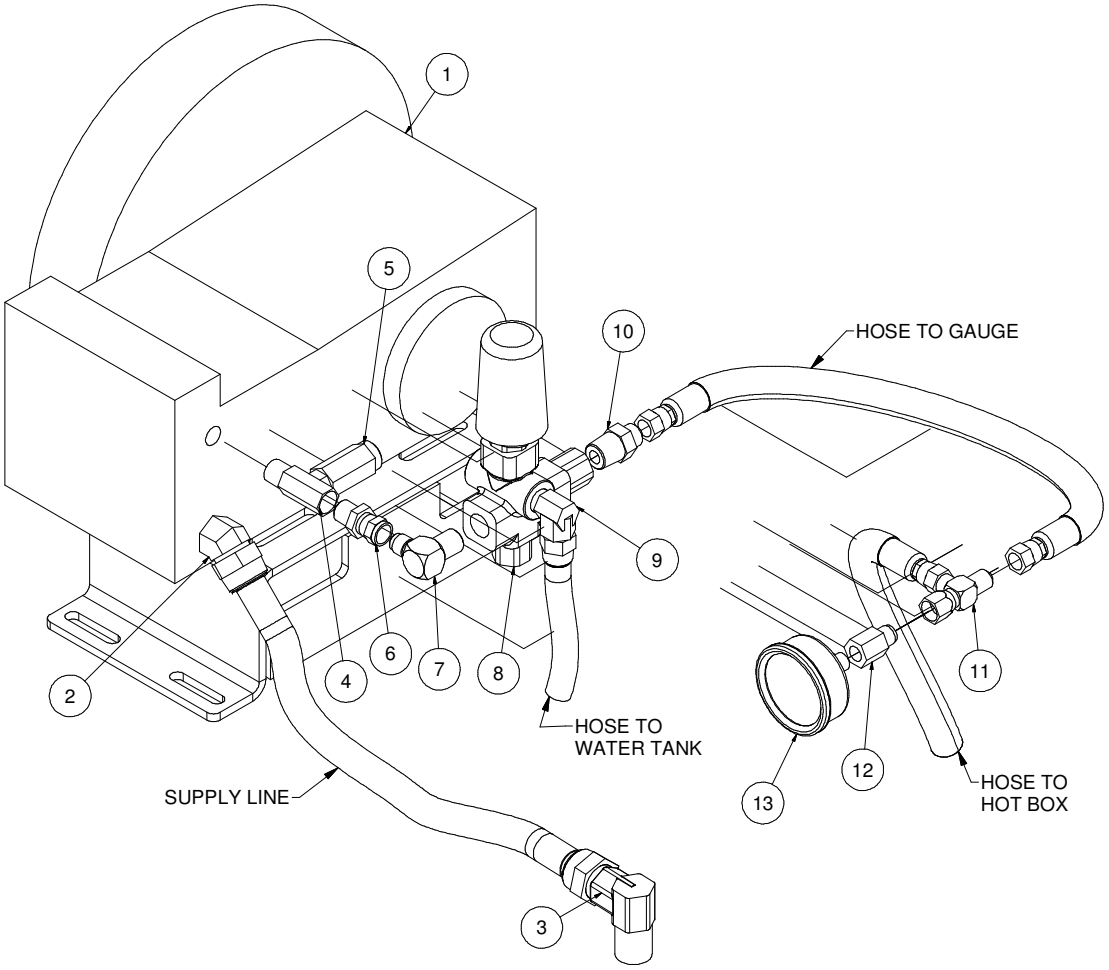

040813-E

VACASSY336

Water Pump Assembly

TSF2021
8GPM
3600PSI

ITEM	QTY	PART NO.	DESCRIPTION
1	1	8047941	WATER PUMP
	4	U000420	SCREW, HC 3/8"-16 X 1"
	4	U210060	WASHER, LOCK 3/8"
	4	U200600	WASHER, FLAT 3/8"
	1	8047241	WATER PUMP CLUTCH
	2	8049163	BELT BP59
2	1	T401561	ELBOW, 45 1/2MP - 3/4MJ
3	1	T401180	ELBOW, 90 3/4MP - 3/4MJ
4	1	T402175	TEE, 3/8FP - 3/8FP - 3/8MP
5	1	8030340	VALVE, RELIEF
6	1	T400813	UNION, 6MP - 6FJ
7	1	T401102	ELBOW, 90 6MJ - 6MP
8	1	8047993	VALVE, REGULATOR PULSAR 4KHP
9	1	T401120	ELBOW, 90 3/8MP - 3/8MJ
10	1	T400028	UNION, 3/8MP - 3/8MJ
11	1	T402153	TEE, 6MJ - 6MJ - 6FJ
12	1	8031126	REDUCER, 1/4FP - 3/8MJ
13	1	8030372	WATER PRESSURE GAUGE 1/4NPT

* NOT SHOWN

040813-E

VACASSY336

Water Pump TSF2021

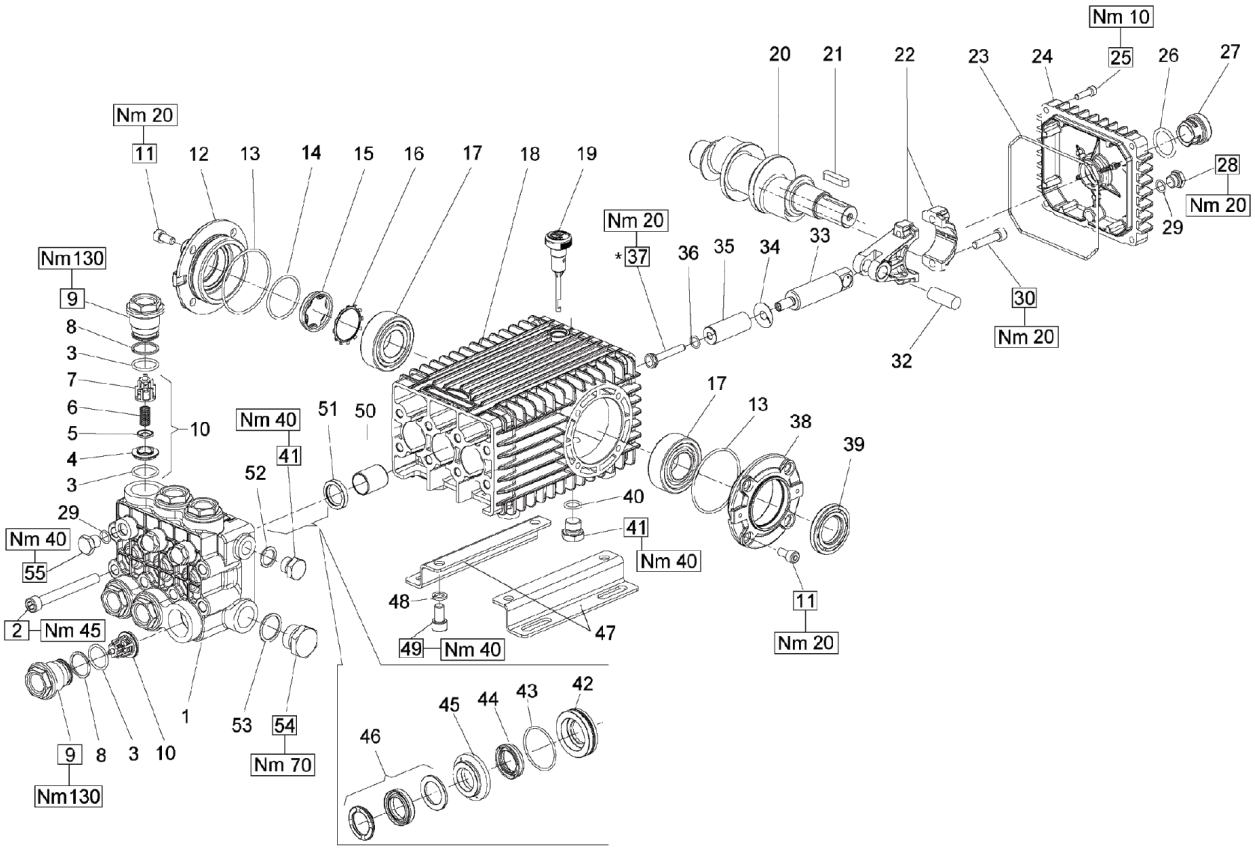

TORQUE SPECS*

*Decrease torque by 20%
if threads are lubricated

POS.	Nm	Ft/lb
2	45	33.2
9	130	95.9
11	20	14.8
25	10	7.4
28	20	14.8
30	20	14.8
37**	20	14.8†
41	40	29.5
49	40	29.5
54	70	51.6
55	40	29.5

VACASSY337

Water Pump TSF2021

ITEM	QTY.	PART #	DESCRIPTION
1	1	8047941-1	Manifold, 20mm
2	8	8047941-2	Headbolt, M10 x 90
3	12	8047941-3	O-ring, 23.81 x 2.62
4	6	8047941-4	Seat, Valve
5	6	8047941-5	Seat, Poppet
6	6	8047941-6	Valve Spring 10 x 18 x 18.5
7	6	8047941-7	Guide, Valve
8	6	8047941-8	Anti-ext ring 24.7 x 29 x 1.5
9	6	8047941-9	Plug, M32 x 1.5 x 29.5
10	6	8047941-10	Valve Assembly Complete
11	8	8047941-11	Screw, M8 x 16
12	1	8047941-12	Cover
13	2	8047941-13	O-ring, 67.95 x 2.62
14	1	8047941-14	O-ring, 39.34 x 2.62
15	1	8047941-15	Oil Sight Glass
16	1	8047941-16	Retainer Clip
17	2	8047941-17	Bearing
18	1	8047941-18	Crankcase
19	1	8047941-19	Dip Stick
20	1	8047941-20	Crankshaft, 19mm Stroke
21	1	8047941-21	Key, 9 x 7 x 35
22	3	8047941-22	Connecting Rod, Complete
23	1	8047941-23	O-ring 133.02 x 2.62
24	1	8047941-24	Rear Cover
25	4	8047941-25	Screw, M6 x 20
26	1	8047941-26	O-ring 26.58 x 3.53
27	1	8047941-27	Oil Indicator
28	1	8047941-28	Plug, G1/4” x 9
29	4	8047941-29	O-ring .426 x .070
30	6	8047941-30	Screw, M8 x 35
32	3	8047941-32	Wrist Pin, 14 x 39
33	3	8047941-33	Pisten Guide
34	3	8047941-34	Flinger Washer
35	3	8047941-35	Plunger (20 mm)
37	3	8047941-37	Screw, Plunger
38	1	8047941-38	Side Cover
39	1	8047941-39	Seal Shaft
40	1	8047941-40	O-ring, 13.95 x 2.62
41	2	8047941-41	Plug 3/8 x 13
42	3	8047941-42	Seal Retainer 20mm
43	3	8047941-43	O-ring, 34.65 x 1.78
44	3	8047941-44	LP Seal 20mm
45	3	8047941-45	Intermed. Ring 20mm
46	3	8047941-46	HP Seal 20mm
47	2	8047941-47	Pump Rail
48	4	8047941-48	Washer M10
49	4	8047941-49	Screw, M10 x 18
50	3	8047941-50	Guide Bushing
51	3	8047941-51	Seal, Plunger Rod
52	1	8047941-52	Gasket, Al. 3/8”
53	1	8047941-53	Washer
54	1	8047941-54	Plug, G3/4” x 16
55	3	8047941-55	Plug 1/4” x 13

KIT #	ITEM #’S INCL’D IN KIT	NO. OF ASSY IN KIT	NO. OF CYL KIT WILL SERVICE
8047941-KIT170	44, 46	3	3
8047941-KIT171	42,43,44,45,46	1	1

VACASSY337

Water Pump Assembly KE24 67HP

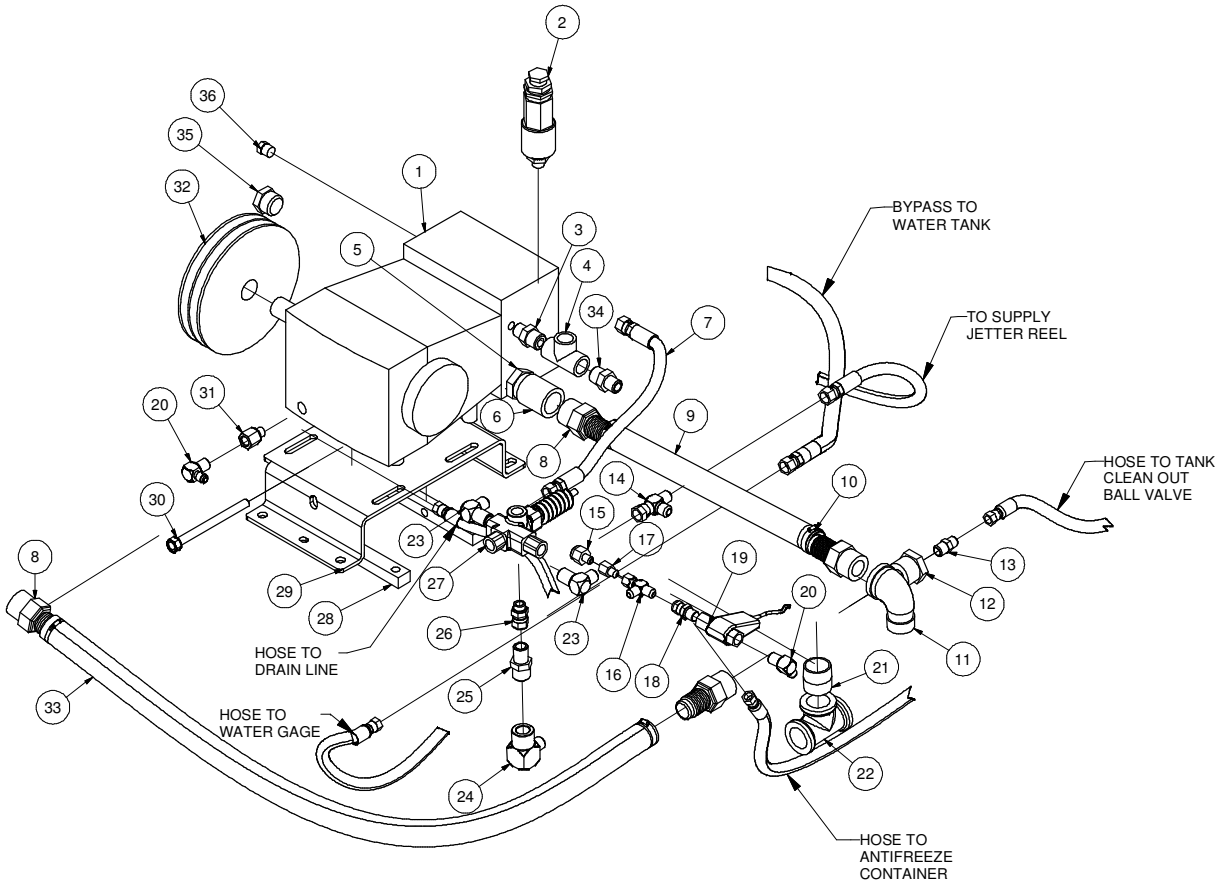

040813-E

VACASSY305

Water Pump Assembly KE24 67HP

ITEM	QTY	PART NO.	DESCRIPTION
1	1	8042352	WATER PUMP KE24
2	1	8040556	SV2-300 SAFETY RELIEF VALVE
*	1	T400139	UNION, 1/2 MP-1/2 FBSPP
*	1	T403085	REDUCER, 3/4MP-1/2FP
3	1	T404030	REDUCER, 1/2MP-3/4MP
4	1	T402160	TEE, 3/4FP-3/4FP-3/4FP
5	1	T400618	REDUCER, 1"MP X 1 1/4"MP
6	1	T422080	COUPLING, 1 1/4"
7	1	8044647	HOSE ASSY VAC 8-14 ST-ST
8	4	8041312	FITTING, HOSE BARB 20HB-20MP
9	1	8042940	HOSE VAC CLEAR VINYL 1 1/4-18"
10	4	8040677	CLAMP, HOSE 1 1/2
11	1	T420120	STREET ELBOW 90 - 1 1/4"
12	1	T403110	REDUCER, 1 1/4"MP-1/2"FP GALV
13	1	8031291	UNION, 1/2MP-3/8MJ
14	1	T402155	TEE, 1/2"FJ-1/2"MJ-1/2"MJ
15	1	T403130	UNION, 8FJ-6MJ
16	1	T402153	TEE, 6MJ-6MJ-6FJ
17	1	8042267	ORIFICE 6MJ-6FJ .094"
18	1	T400813	UNION, 6FJ-6MP
19	1	8031267	FLOW SWITCH
20	2	T401102	ELBOW, 6MJ-6MP
21	1	T421040	NIPPLE, PIPE 1 1/4"MNPT
22	1	8041049	TEE, 1 1/4" PIPE
23	2	T401140	ELBOW, 8MP-8MJ
24	1	T401160	ELBOW, 12MP-12MJ
25	1	T400070	UNION, 1/2MP-3/4MJIC
26	1	T400814	UNION, 8MP-8FJ
27	1	8030341	VALVE, UNLOADER, GREENSPRING
28	2	8043317	TENSIONER BLOCK, ADJUSTING
29	1	8044167	PUMP BRACKET KE24A
30	1	8030020	ROD, TENSIONER
31	1	T400119	UNION, 3/8MBSPP X 3/8FP
32	1	8043248	SHEAVE, 9.75" OD SK 2-GROOVE
*	1	8040644	BUSHING, SK
*	2	8049164	BELT, BP61
33	1	8043076	HOSE VAC CLEAR VINYL 1 1/4-37"
34	1	T400080	REDUCER, 3/4"MP X 1/2"MJ
35	1	T405120	PLUG, 1" MB
36	1	T405062	PLUG, 1/2"NPT

Water Pump Assembly KE24

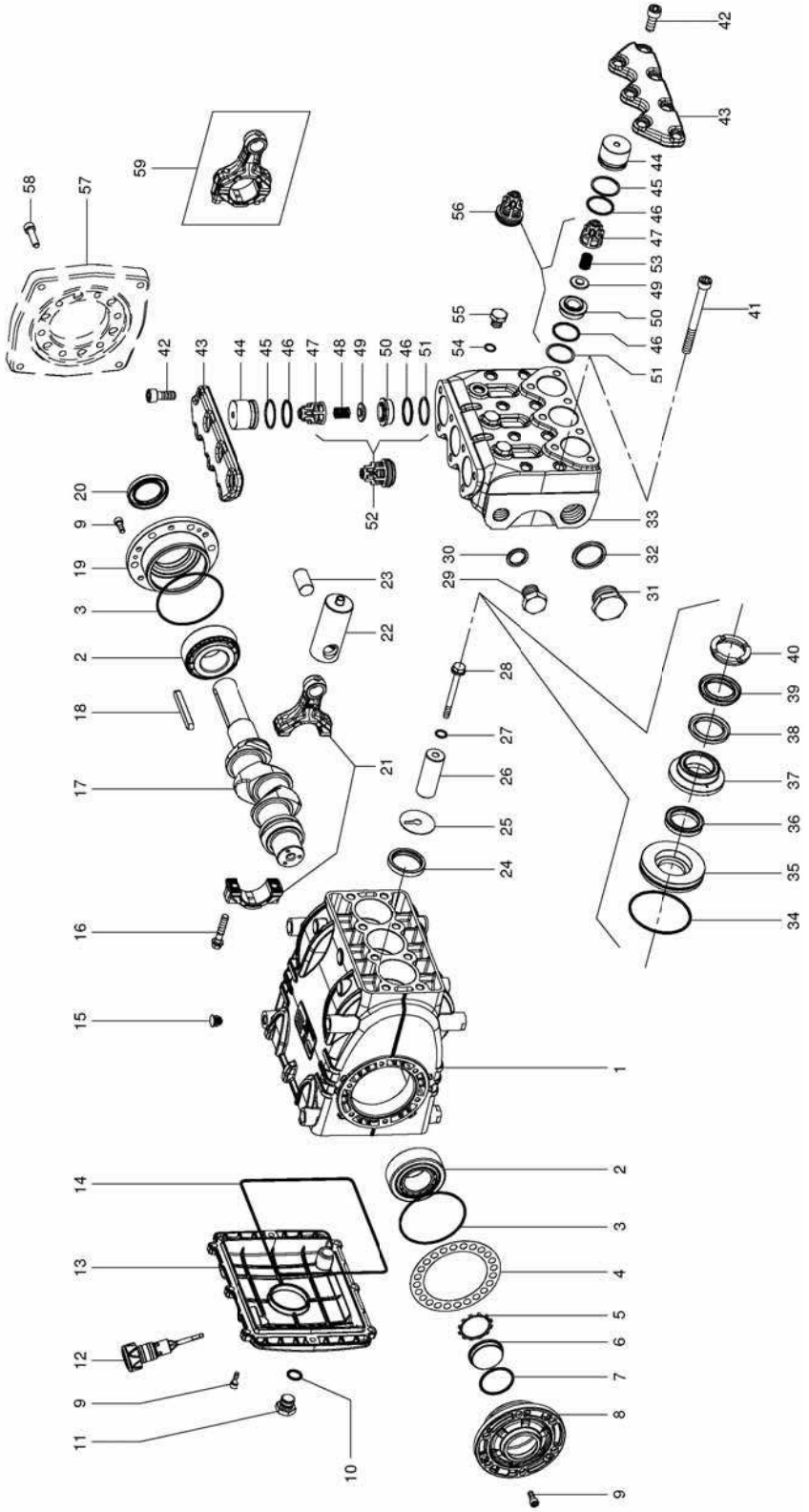

071509-E

VACASSY329

Water Pump Assembly KE24

ITEM	QTY	PART NO.	DESCRIPTION
1	1	8042352-1	PUMP CRANKCASE
2	2	8042352-2	ROLLER BEARING 33207/Q
3	2	8042352-3	O-RING D. 80,6X2,62
4		8042352-4	SHIM 0,1
		*	SHIM, 25
		*	SHIM, 0,35
5	1	8042352-5	RING ZJ45
6	1	8042352-6	OIL LEVEL INDICATOR
7	1	8042352-7	O-RING D. 39,34X2,62
8	1	8042352-8	OIL LEVEL INDICATOR SIDE BEARING COVER
9	20	8042352-9	SCREW TCEI M6X16 UNI 5931
10	1	8042352-10	O-RING D. 13,95X2,62
11	1	8042352-11	PLUG G3/8”
12	1	8042352-12	DIPSTICK
13	1	8042352-13	CRANKCASE COVER
14	1	8042352-14	O-RING D. 196,52X2,62
15	7	8042352-15	PLUG FOR D. 15 PORT
16	6	8042352-16	CONNECTING ROD SCREW
17	1	8042352-17	CRANKSHAFT
18	1	8042352-18	CRANKSHAFT KEY
19	1	8042352-19	MOTOR SIDE BEARING COVER
20	1	8042352-20	OIL SEAL 35X52X7 SPEC
21	3	8042352-21	CONNECTING ROD
22	3	8042352-22	PISTON
23	3	8042352-23	PIN D. 18X36
24	3	8042352-24	SEAL 36X47X7
25	3	8042352-25	WIPER
26	3	8042352-26	PLUNGER KE24
27	3	8042352-27	O-RING D. 11X2 SPEC
28	3	8042352-28	PLUNGER BOLT
29	1	8042352-29	PLUG G1/2”X18
30	1	8042352-30	WASHER D.1/2”
31	1	8042352-31	PLUG G1”X17
32	1	8042352-32	WASHER D.1”
33	1	8042352-33	MANIFOLD D22-24
34	3	8042352-34	OR D.50C52X1.78 KIT 2002-3-4-5-6-7-8-9-10-11
35	3	8042352-35	PACKING RETAINER D.24
36	3	8042352-36	PACKING D.24 L.P. KIT 2006-2007
37	3	8042352-37	MIDDLE RING D.24 KIT 2007
38	3	8042352-38	RESTOP RING D.24 KIT 2006-2007
39	3	8042352-39	PACKING D.24 H.P. KIT 2006-2007
40	3	8042352-40	FRONT RING D.24 KIT 2007
41	8	8042352-41	SCREW TCEI M10X110 UNI 5931
42	14	8042352-42	SCREW TCEI M10X25 UNI 5931 SPEC.
43	2	8042352-43	VALVE COVER
44	6	8042352-44	VALVE PLUG
45	6	8042352-45	BACK UP RING D.32,4X36,5X1,5
46	12	8042352-46	O-RING D.29.82X2,62 KIT 2000-2001
47	6	8042352-47	SUCTION/DELIVERY VALVE GUIDE PLATE KIT 2000-2001
48	3	8042352-48	DELIVERY VALVE SPRING KIT 2001
49	6	8042352-49	SUCTION/DELIVERY VALVE PLATE KIT 2000-2001
50	6	8042352-50	SUCTION/DELIVERY VALVE SEAT KIT 2000-2001
51	6	8042352-51	BACK UP RING D.31X35,5X1,5
52	3	8042352-52	DELIVERY VALVE ASSEMBLY KIT 2001
53	3	8042352-53	SUCTION VALVE SPRING KIT 2000
54	3	8042352-54	O-RING D.10,82X1,78
55	3	8042352-55	PLUG G1/4”X13
56	3	8042352-56	SUCTION VALVE ASSEMBLY KIT 2000
57	1	8042352-57	HYDRAULIC MOTOR FLANGE
58	6	8042352-58	SCREW TCEI M8X30 UNI 5931
59	3	8042352-59	CONNECTING ROD (COMPLETE)

071509-E

VACASSY329

Unloader Valve PULSAR3KHP

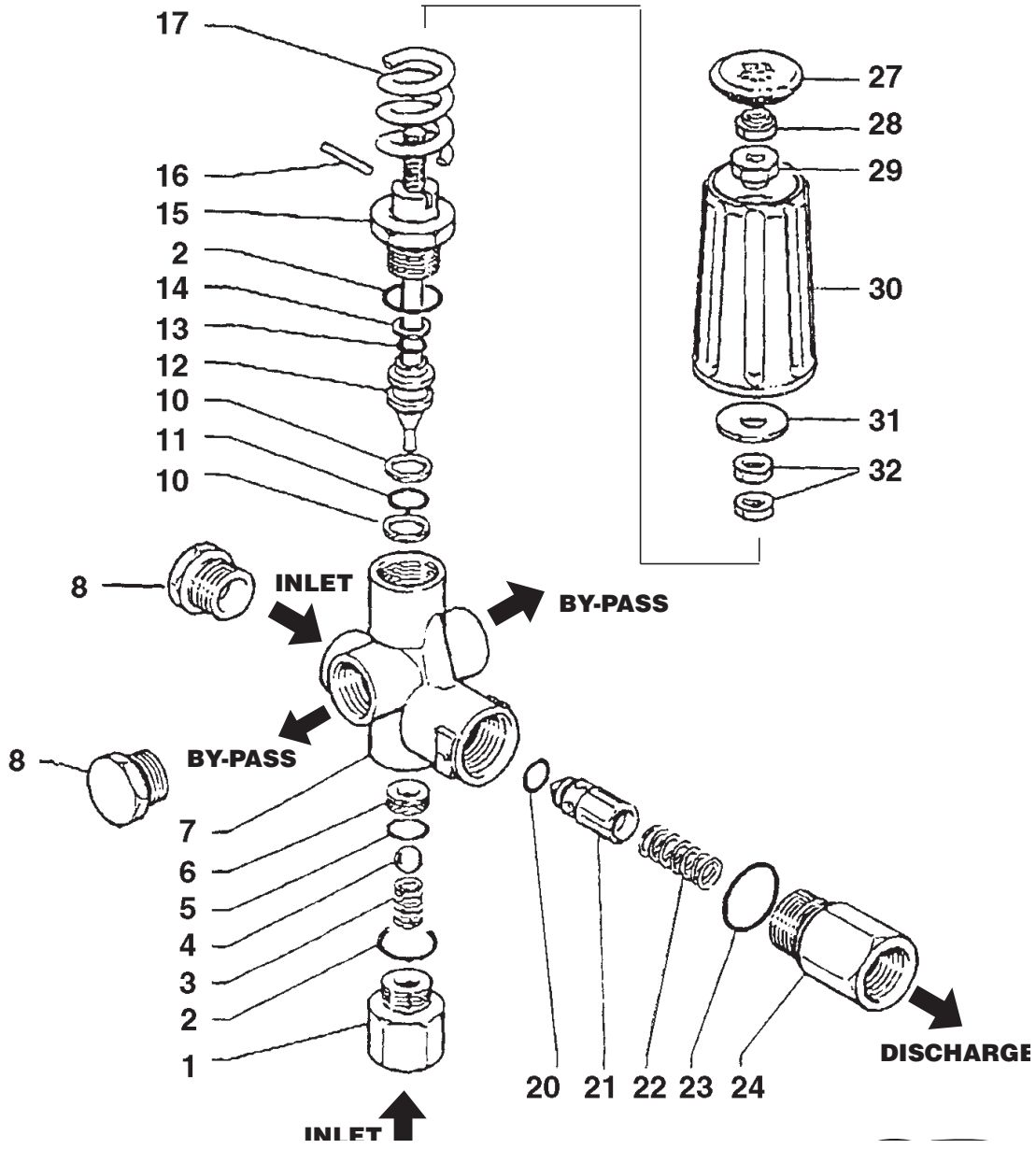

050409

VACASSY328

Unloader Valve PULSAR3KHP

ITEM	QTY	PART #	DESCRIPTION
1	1	8040177-1	INLET FITTING, 3/8 NPT-F
2	2	8040177-2	O-RING, .676ID X .070CS
3	1	8040177-3	BALL SPRING
4	1	8040177-4	SS BALL, 13/32
5	1	8040177-5	O-RING, .437ID X .070CS
6	1	8040177-6	SS SEAT, .551OD X .335ID
7	1	8040177-7	BRASS BODY, 3/8 NPT
8	2	8040177-8	PLUG, 3/8"NPT
10	2	8040177-10	BACKUP RING
11	1	8040177-11	O-RING, .424ID X .103CS
12	1	8040177-12	SS PISTON
13	1	8040177-13	O0RING, .299ID X .103CS
14	1	8040177-14	BACKUP RING
15	1	8040177-15	PISTON HOUSING
16	1	8040177-16	LOCKING PIN
17	1	8040177-17	BLUE SPRING
20	1	8040177-20	O-RING, .236ID X .118CS
21	1	8040177-21	CHECK VALVE
22	1	8040177-22	SS SPRING
23	1	8040177-23	O-RING, .739ID X .070CS
24	1	8040177-24	OUTLET FITTING, 3/8NPT-F
27	1	8040177-27	PLASTIC PLUG for KNOB
28	1	8040177-28	ZINC NUT, M8
29	1	8040177-29	INSERT M8
30	1	8040177-30	PLASTIC KNOB
31	1	8040177-31	WASHER, 9mm X 24mm
32	2	8040177-32	BRASS NUT, M8

Unloader Valve YU2140

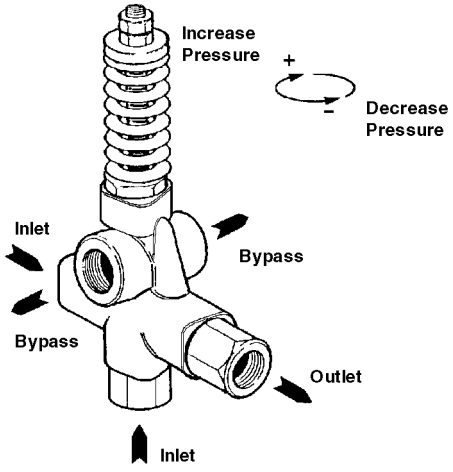

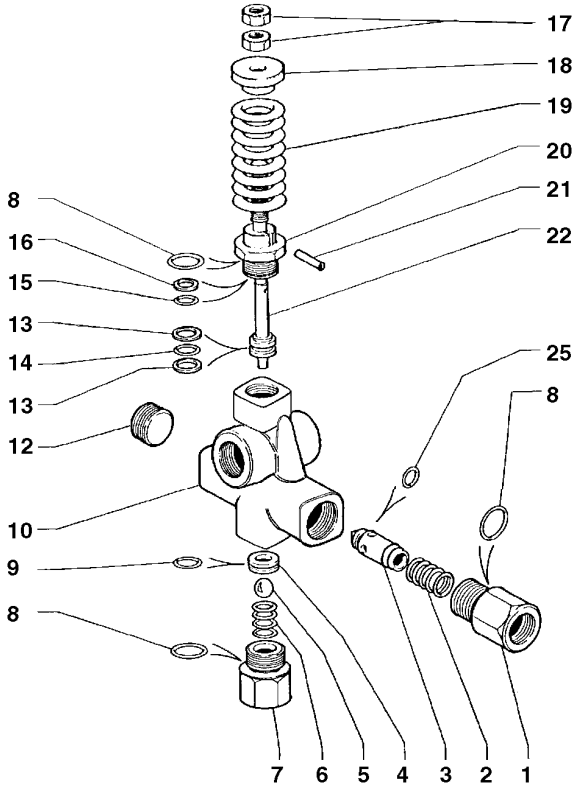

072908

VACASSY326

Unloader Valve YU2140

ITEM	QTY	PART #	DESCRIPTION
1	1	8030341-1	OUTLET CONNECTION
2	1	8030341-2	SPRING
3	1	8030341-3	CHECK VALVE
4	1	8030341-4	SEAT
5	1	8030341-5	SS BALL
6	1	8030341-6	SPRING
7	1	8030341-7	INLET CONNECTION
8	2	8030341-8	O-RING
9	1	8030341-9	O-RING
10	1	8030341-10	VALVE HOUSING
12	1	8030341-12	PLUG
13	2	8030341-13	BACK RING
14	1	8030341-14	O-RING
15	1	8030341-15	O-RING
16	1	8030341-16	BACK RING
17	1	8030341-17	NUT
18	1	8030341-18	SPRING GUIDE
19	1	8030341-19	SPRING-GREEN (YU2140)
20	1	8030341-20	PISTON HOUSING
21	1	8030341-21	PIN
22	1	8030341-22	PISTON
25	1	8030341-25	O-RING

Electrical Control Bracket

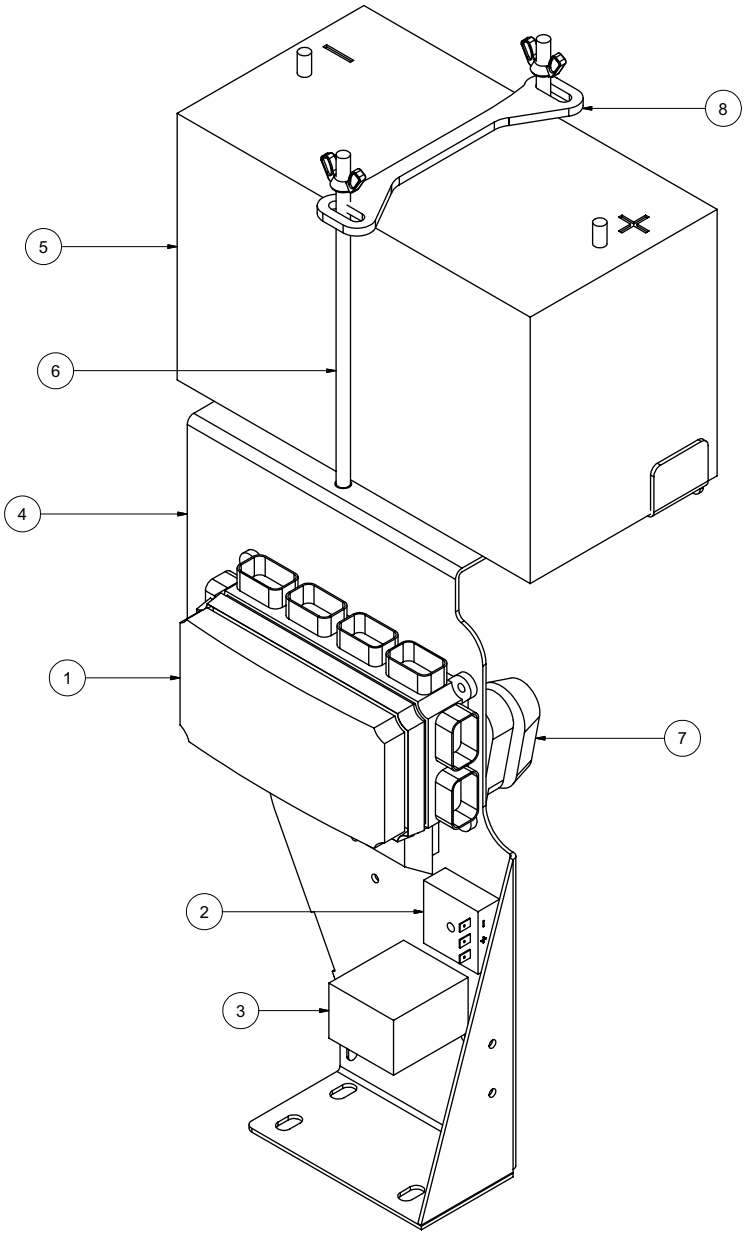

012813-E

VACASSY550

Electrical Control Bracket

ITEM	QTY	PART NO.	DESCRIPTION
1	1	X000239	BUSSMAN VEC
	7	X000205	FUSE 5A
	2	X000206	FUSE 10A
	2	X000207	FUSE 20A
	3	X000237	FUSE 30A
	1	X000236	CIRCUIT BREAKER 20A
	1	X000210	CIRCUIT BREAKER 30A
	6	X000209	RELAY 35A/25A
	5	X000208	DIODE 6A
*	4	U000040	SCREW, HC 1/4" - 20 X .750
*	4	U200020	WASHER, FLAT 1/4"
*	4	U210020	WASHER, LOCK 1/4"
*	4	U100020	NUT, HEX 1/4"-20
2	1	8042282	SWITCH, DELAY RELAY
*	1	U100020	NUT, HEX 1/4"-20
	1	U200020	WASHER, FLAT 1/4"
	1	U210020	WASHER, LOCK 1/4"
	1	U000080	SCREW, HC 1/4"-20 X 1.25 ZP G5
3	1	X000241	RELAY TIMER 15 SEC SHUTDOWN
*	1	U100020	NUT, HEX 1/4"-20
	1	U200020	WASHER, FLAT 1/4"
	1	U210020	WASHER, LOCK 1/4"
	1	U000080	SCREW, HC 1/4"-20 X 1.25 ZP G5
4	1	8043127	CONTROL PANEL - HARNESS MTG PLATE
5	1	X400050	BATTERY, 31-MHD WORKAHOLIC
6	2	8043742	BATTERY HOLD DOWN ROD ASSY
7	1	8043800	FUSE HOLDER AMG
	1	8043801	FUSE 250A AMG
*	2	U000060	SCREW, HC 1/4"-20 X 1.00
*	2	U200020	WASHER, FLAT 1/4"
*	2	U210020	WASHER, LOCK 1/4"
*	2	U100020	NUT, HEX 1/4"-20
8	1	8050016	BATTERY HOLD DOWN
*	1	X200005	HARNESS VAC CONTROL

* NOT SHOWN

Control Panel

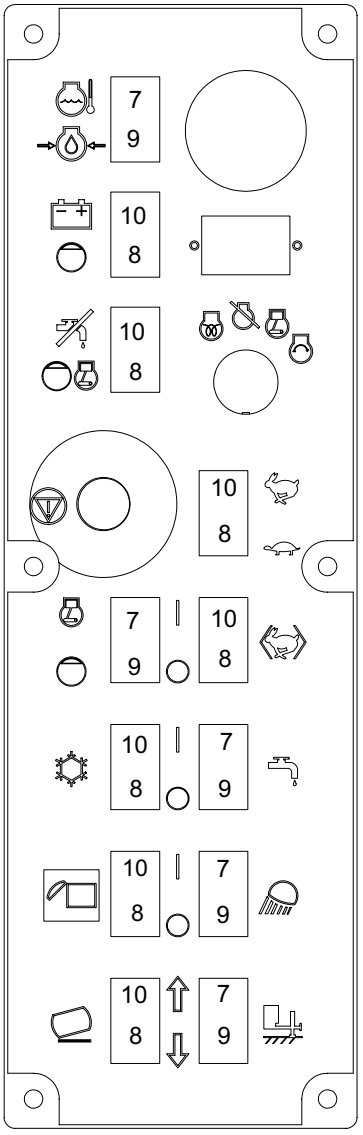

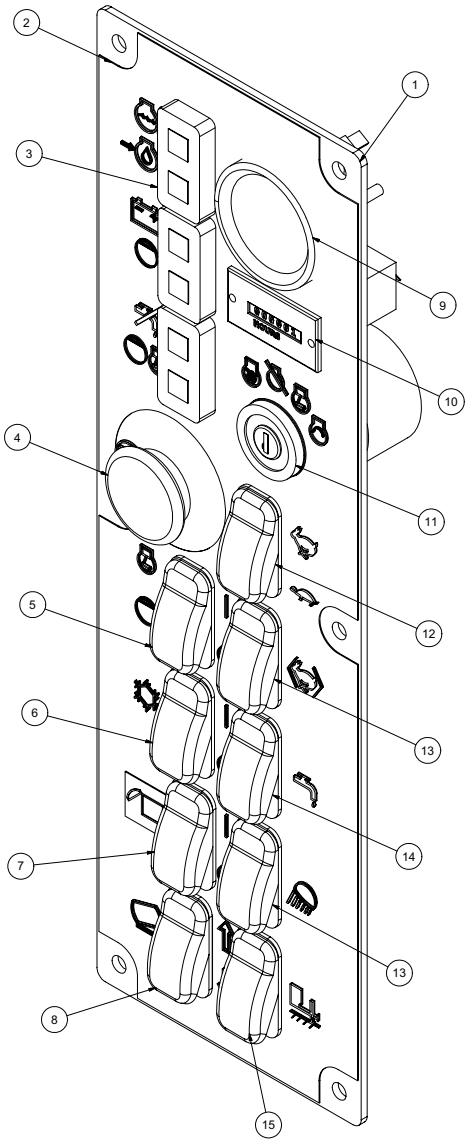

101112-E

VACASSY504

Control Panel

ITEM	QTY	PART NO.	DESCRIPTION
1	1	8043128	CONTROL PANEL - MAIN PLATE
2	1	J200031	DECAL - CONTROL PANEL
3	3	X000260	LIGHT LED DUAL PANEL
4	1	X000280	E-STOP
5	1	X000273	ROCKER SWITCH SPST (ON) NONE -OFF
6	1	X000271	ROCKER SWITCH DPST (ON) NONE -ON
7	1	X000274	ROCKER SWITCH DPST (ON) OFF (ON)
8	1	X000274	ROCKER SWITCH DPDT (ON) OFF (ON)
9	1	X100001	FUEL GAUGE
10	1	X000300	HOUR METER
11	1	8030458	IGNITION SWITCH
12	1	X000271	ROCKER SWITCH DPST ON - ON
13	2	X000270	ROCKER SWITCH SPST ON -OFF
14	1	X000270	ROCKER SWITCH SPST ON -OFF
	1	X000271	ROCKER SWITCH DPST ON -ON
15	1	X000290	ROCKER SWITCH PLUG
	1	X000274	ROCKER SWITCH DPDT (HYD. JACK OPTION)
*	1	8030829	KEY, IGNITION - KUBOTA

* NOT SHOWN

Boom Hydraulics Assembly

49HP

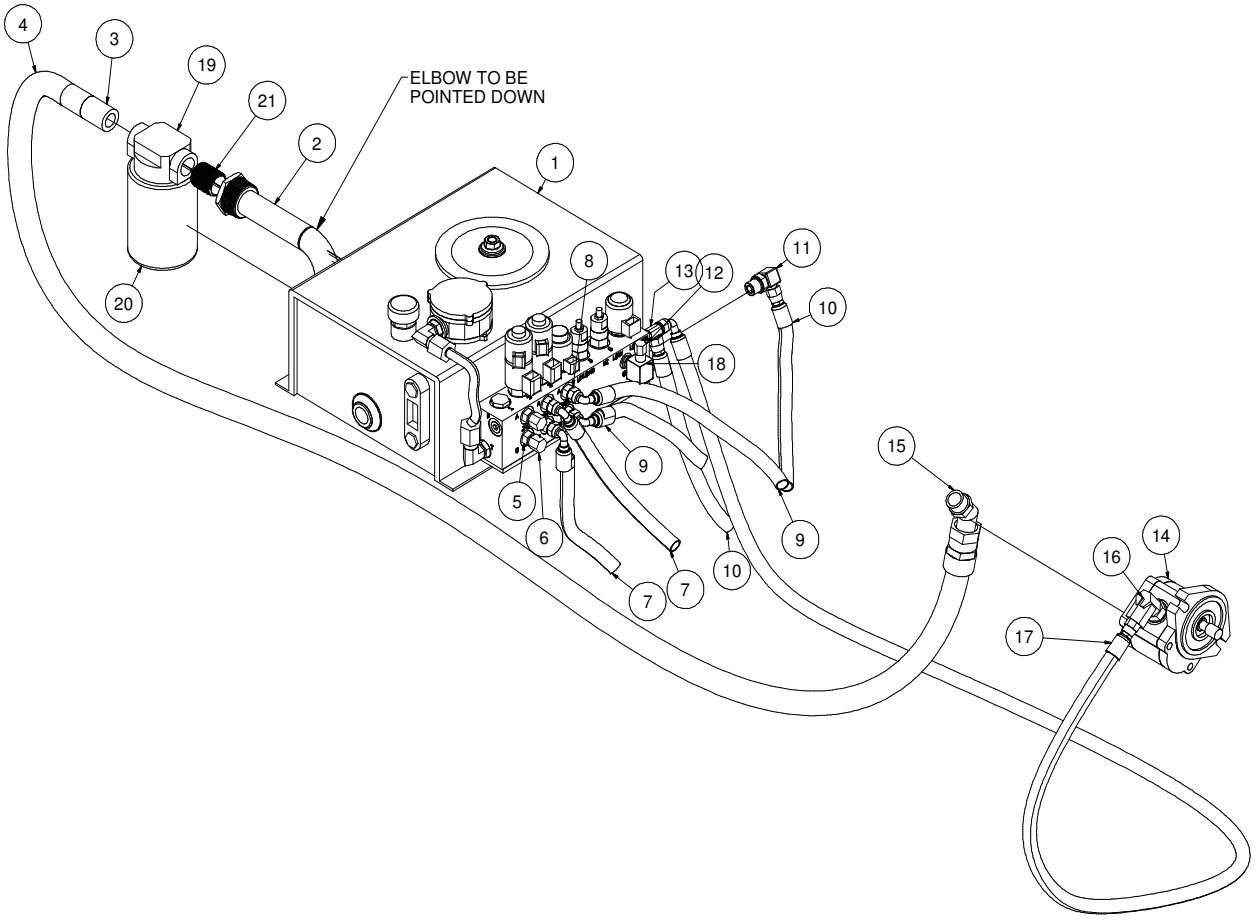

103012-E

VACASSY999

Boom Hydraulics Assembly

49HP

ITEM	QTY	PART	DESCRIPTION
1	1	8047330	KIT, HYD. BOOM BASE PACK (CROSS2)
*	8	U000440	WASHER, FLAT 3/8”
*	4	U000441	SCREW, HC 3/8”-16 X 1.25”
*	4	U210061	NUT, LOCK,NY 3/8”
2	1	8048348	FITTING SUCTION 1-1/2"MP W/ELB
3	1	8043963	UNION, 1”MP - 1”BARB
4	1	8047786	HOSE VAC PUSH 1” - 52”LG
5	4	T400037	UNION, 6MB - 6MJ
6	2	T405203	CAP, 3/8” FEM. JIC, HEX HEAD
7	2	8043782	HOSE ASSY VAC 6 - 77” ST-90 (99HP)
8	2	T400550	REDUCER, 3/8”MB - 1/4”MJ
9	2	8047787	HOSE ASSY VAC 4 - 133” ST-90 (99HP)
10	2	8047788	HOSE ASSY VAC 6 - 200” ST-ST (99HP)
11	1	T401250	ELBOW, 90 3/8”MB - 3/8”MJ
12	1	T405200	CAP, 1/4” FEM. JIC, HEX HEAD
13	1	T402148	TEE, 6MB - 6MJ - 6MJ
14	1	8047334	PUMP, HYD BOOM 49HP (CROSS2)
15	1	8043964	ELBOW, 45 16HB - 12MB
16	1	T401290	ELBOW, 90 5/8”MB - 3/8”MJ
17	1	8042924	HOSE ASSY VAC 6-60” ST-ST (99HP)
18	1	T401230	ELBOW, 90 3/8”MB - 1/4”MJ
19	1	8048346	STRAINER SUCTION EXT (HEAD)
20	1	8048347	STRAINER SUCTION EXT(ELEMENT)
21	1	T421030	NIPPLE,CLOSE 1"MP

* NOT SHOWN

Boom Hydraulics Assembly

67HP/99HP

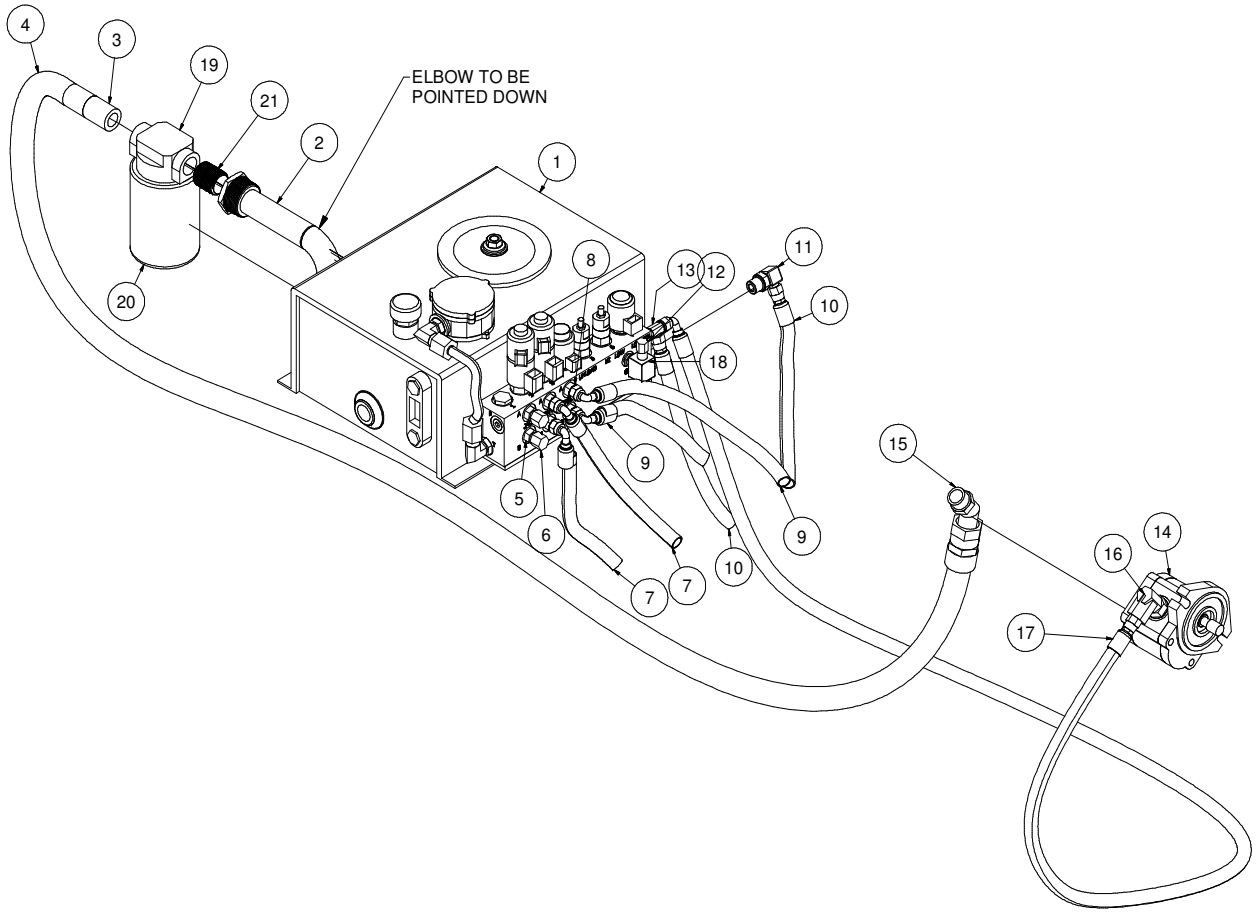

103012-E

VACASSY998

Boom Hydraulics Assembly

67HP/99HP

ITEM	QTY	PART	DESCRIPTION
1	1	8047330	KIT, HYD. BOOM BASE PACK (CROSS2)
*	8	U000440	WASHER, FLAT 3/8”
*	4	U000441	SCREW, HC 3/8”-16 X 1.25”
*	4	U210061	NUT, LOCK,NY 3/8”
2	1	8048348	FITTING SUCTION 1-1/2"MP W/ELB
3	1	8043963	UNION, 1”MP - 1”BARB
4	1	8047786	HOSE VAC PUSH 1” - 52”LG
5	4	T400037	UNION, 6MB - 6MJ
6	2	T405203	CAP, 3/8” FEM. JIC, HEX HEAD
7	2	8043782	HOSE ASSY VAC 6 - 77” ST-90 (99HP)
8	2	T400550	REDUCER, 3/8”MB - 1/4”MJ
9	2	8047787	HOSE ASSY VAC 4 - 133” ST-90 (99HP)
10	2	8047788	HOSE ASSY VAC 6 - 200” ST-ST (99HP)
11	1	T401250	ELBOW, 90 3/8”MB - 3/8”MJ
12	1	T405200	CAP, 1/4” FEM. JIC, HEX HEAD
13	1	T402148	TEE, 6MB - 6MJ - 6MJ
14	1	8047333	PUMP, HYD BOOM 67/99HP (CROSS2)
15	1	8043964	ELBOW, 45 16HB - 12MB
16	1	T401290	ELBOW, 90 5/8”MB - 3/8”MJ
17	1	8042924	HOSE ASSY VAC 6-60” ST-ST (99HP)
18	1	T401230	ELBOW, 90 3/8”MB - 1/4”MJ
19	1	8048346	STRAINER SUCTION EXT (HEAD)
20	1	8048347	STRAINER SUCTION EXT(ELEMENT)
21	1	T421030	NIPPLE,CLOSE 1"MP

* NOT SHOWN

Base Manifold Assembly

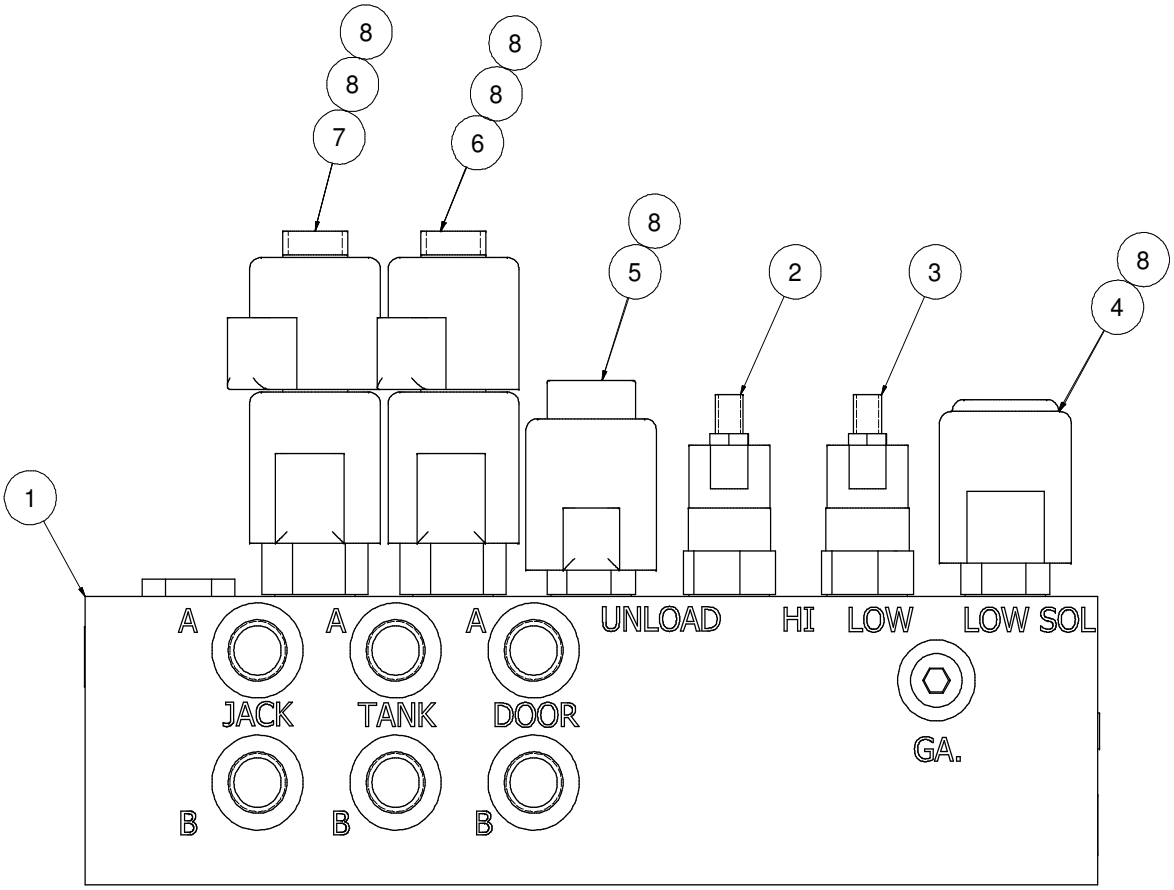

011413-E

VACASSY995

Base Manifold Assembly

ITEM	QTY	PART	DESCRIPTION
1	1	8047330-03	MANIFOLD BLOCK (ONLY)
2	1	8047330-12	HIGH PRESSURE RELIEF
3	1	8047330-13	LOW PRESSURE RELIEF
4	1	8047330-07	SOL. LOW PRESSURE
5	1	8047330-08	SOL. UNLOAD
6	1	8047330-09	SOL. DOOR
7	1	8047330-09	SOL. TANK
8	6	8047330-11	COIL

* NOT SHOWN

011413-E **VACASSY995**

Hydraulic Pump w/ Bracket

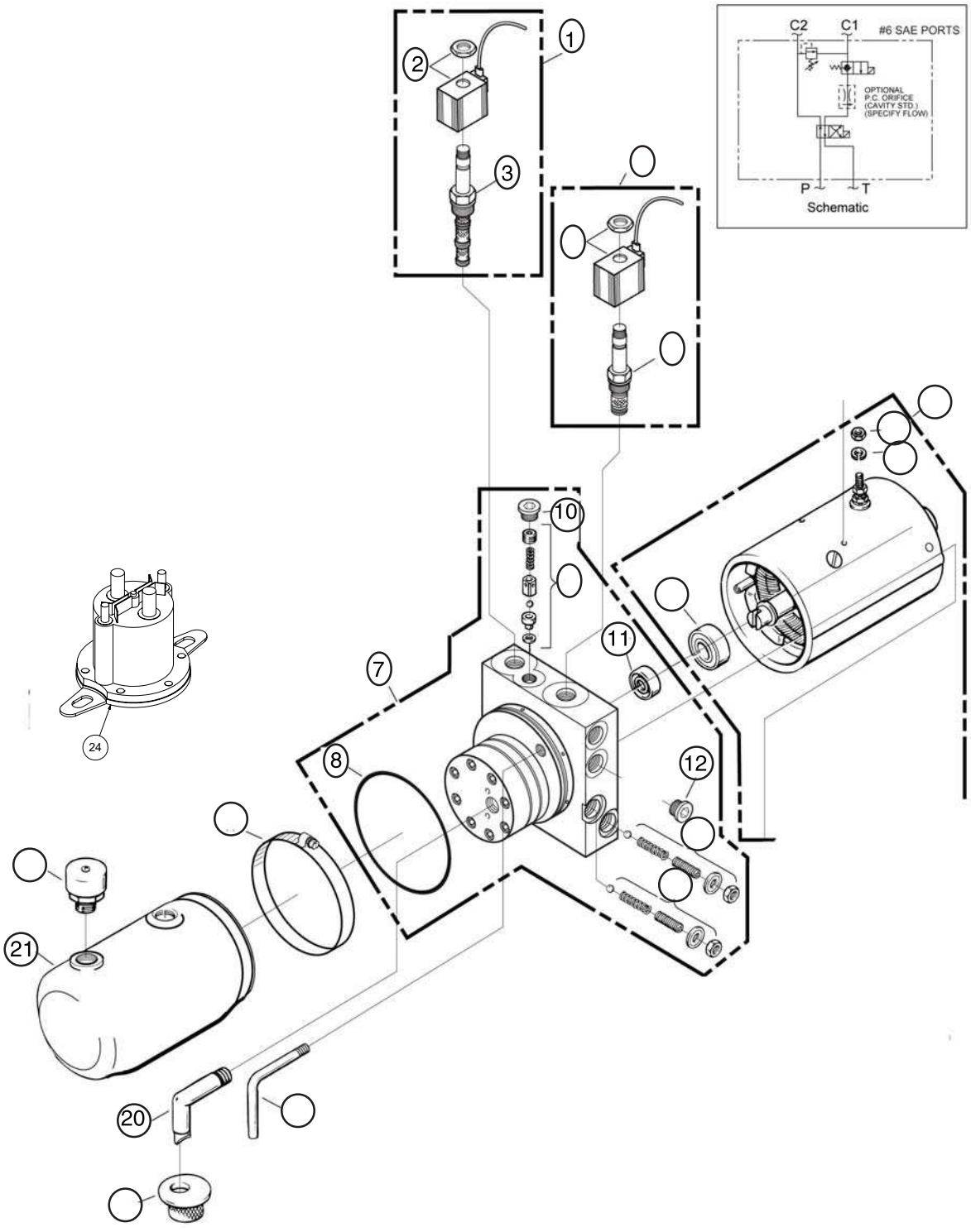

033110-E

VACASSY250

Hydraulic Pump w/ Bracket

ITEM	QTY	NUMBER	DESCRIPTION
	1	8046300	PUMP,HYD 12V VAC 4.5QT
	2	U000420	SCREW, HC 3/8"-16 X 1"
	2	U210060	WASHER, LOCK 3/8"
	2	U200600	WASHER, FLAT 3/8"
	2	T400037	UNION 6MB - 6MJR
	2	8040973	HOSE ASSY VAC 6-20 ST-90
	2	T400391	BULKHEAD 6MP - 6MP
1	1	8046300-14	VALVE, 4-WAY - 2 POSITION
2	1	8046300-15	COIL, 10 VDC GROUNDED W/ DEUTSCH CONN
3	1	8046300-16	CARTRIDGE, 4-WAY 2 POSITION
4	1	8046300-17	VALVE, 2-WAY 2 POSITION (12V) GROUNDED
5	1	8046300-18	COIL, 10VDC 2-WAY 2 POS GRND W/DEUTSCH CONN
6	1	8046300-19	VALVE, 12V HYD 2-WAY 2 POSITION
7	1	8046300-23	PUMP ASSEMBLY
8	1	8046300-24	O-RING INDUST 3 5/8" X 3 7/8" X 1/8"
9	1	8046300-25	PARTS KIT - VALVE ASSY, POPPET/BALL CHECK
10	1	8046300-26	PLUG
11	1	8046300-27	SEAL
12	1	8046300-28	PLUG, #8 SAE
13	2	8046300-30	PARTS KIT, RELIEF VALVE
14	1	8046300-31	MOTOR, ELECTRIC 12VDC
15	1	8046300-32	BEARING, BASE MOTOR
16	1	8046300-33	NUT, HEX 5/16 -24
17	1	8046300-34	WASHER, LOCK 5/16"
	2	8046300-38	SCREW, HEX HEAD 1/4"-20 X 1 3/8"
	1	8046300-41	PLUG, 3/8"NPTF
18	1	8046300-42	TUBE, RETURN (1/8")
19	1	8046300-43	SCREEN, FILTER (SUCTION)
20	1	8046300-44	TUBE, FILTER SUCTION 3/8"NPT 90 DEG
21	1	8046300-45	6QT RESEVOIR POLY
	*	8040486-45	3QT RESEVOIR POLY
	*	8046300-48	4.5QT RESEVOIR POLY
22	1	8046300-46	PLUG, VENT 3/8"NPT
23	1	8046300-47	CLAMP, HOSE WORM GEAR (IN SERIES)
24	1	8046258	SWITCH HYD PUMP 12V
*	1	X200002	HYDRAULIC PUMP WIRE HARNESS
*	1	8043499	HYDRAULIC PUMP MOUNT
		8044297	HYDRAULIC PUMP MOUNT (REVERSE FLOW)
		8045336	HYDRAULIC PUMP MOUNT (412 BLOWER)

* NOT SHOWN

Hydraulic Pump Assembly

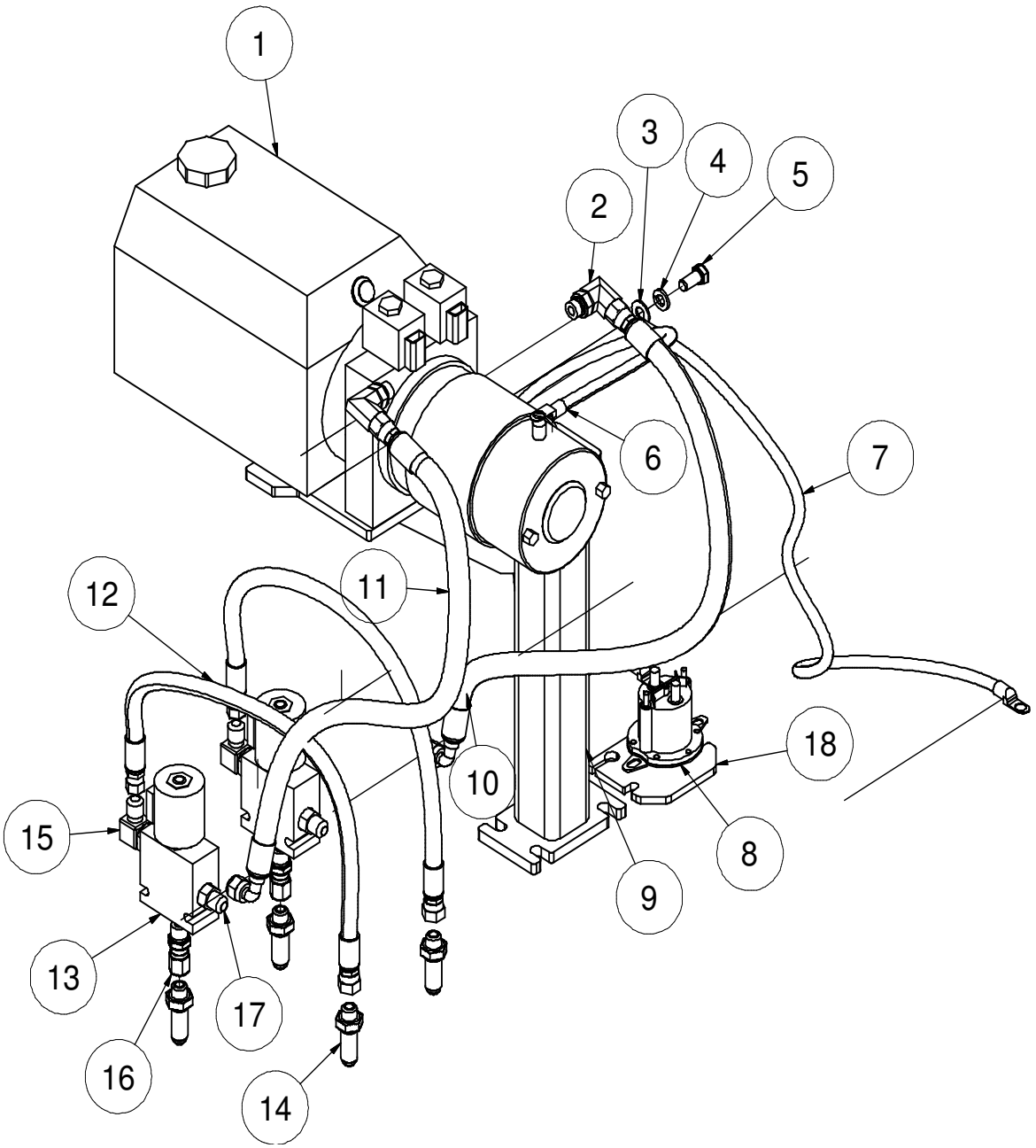

101512-E

VACASSY251

Hydraulic Pump Assembly

ITEM	QTY	PART	DESCRIPTION
1	1	8046300	PUMP, HYD 12V 4.5QT
2	2	T401250	ELBOW, 90 3/8" MB-MJ
3	1	U200600	WASHER, FLAT 3/8"
4	1	U210060	WASHER, LOCK 3/8"
5	1	U200400	SCREW, HC 3/8"-16 X .750
6	1	X300233	CABLE, BATTERY HOT 1GA 26"
	2	X300251	LUG, CABLE 1GA 3/8" HOLE
7	1	X300224	CABLE, BATTERY GROUND 1GA 21"
	2	X300251	LUG, CABLE 1GA 3/8" HOLE
8	1	8046258	SWITCH HYD PUMP 12V RELOCATE
	2	U000040	SCREW, HC 1/4"-20 X .75 ZP G5
	2	U200020	WASHER, FLAT 1/4" ZP
	2	U210020	WASHER, LOCK 1/4" ZP
	2	U100020	NUT, HEX 1/4"-20
9	1	8043499	BRACKET 36/49 12V HYD PUMP
	1	8047283	BRACKET 99AW HYD PUMP
*	2	U000460	SCREW, HC 3/8"-16 X 1.50 ZP G5
*	2	U000480	SCREW, HC 3/8"-16 X 1.75 ZP G5
*	5	U200060	WASHER, FLAT 3/8"
*	5	U210060	WASHER, LOCK 3/8"
*	4	U100060	NUT, HEX 3/8"-16
*	1	U000441	SCREW, HC 3/8"-16 X 1.25 ZP G8
10	1	8046685	HOSE ASSY VAC 6-25" ST-90 (500LE/LEHD)
	1	8046686	HOSE ASSY VAC 6-22" ST-90 (800LE/LEHD)
	1	8040973	HOSE ASSY VAC 6-20" ST-90 (73/99)
11	1	8046687	HOSE ASSY VAC 6-23" ST-90 (500LE/LEHD)
	1	8040973	HOSE ASSY VAC 6-20" ST-90 (800LE/LEHD)
	1	8040973	HOSE ASSY VAC 6-20" ST-90 (73/99)
12	2	8040971	HOSE ASSY VAC 4-19" ST-ST6FJ (LE/LEHD)
13	2	8041788	VALVE, SOLENOID 3-WAY W/ INT C4K
14	4	T400391	BULKHEAD 3/8"MJ - 3/8"MJ
15	2	T401250	ELBOW, 90 3/8"MB - 3/8"MJ
16	2	T400036	UNION, 3/8"MB - 3/8"FJ
17	2	T400037	UNION, 3/8"MB - 3/8"MJ
18	1	8046127	BRACKET PUMP SOLENOID

* NOT SHOWN

Water Tank Assembly

125 Gallon Saddle Tanks (Skid)

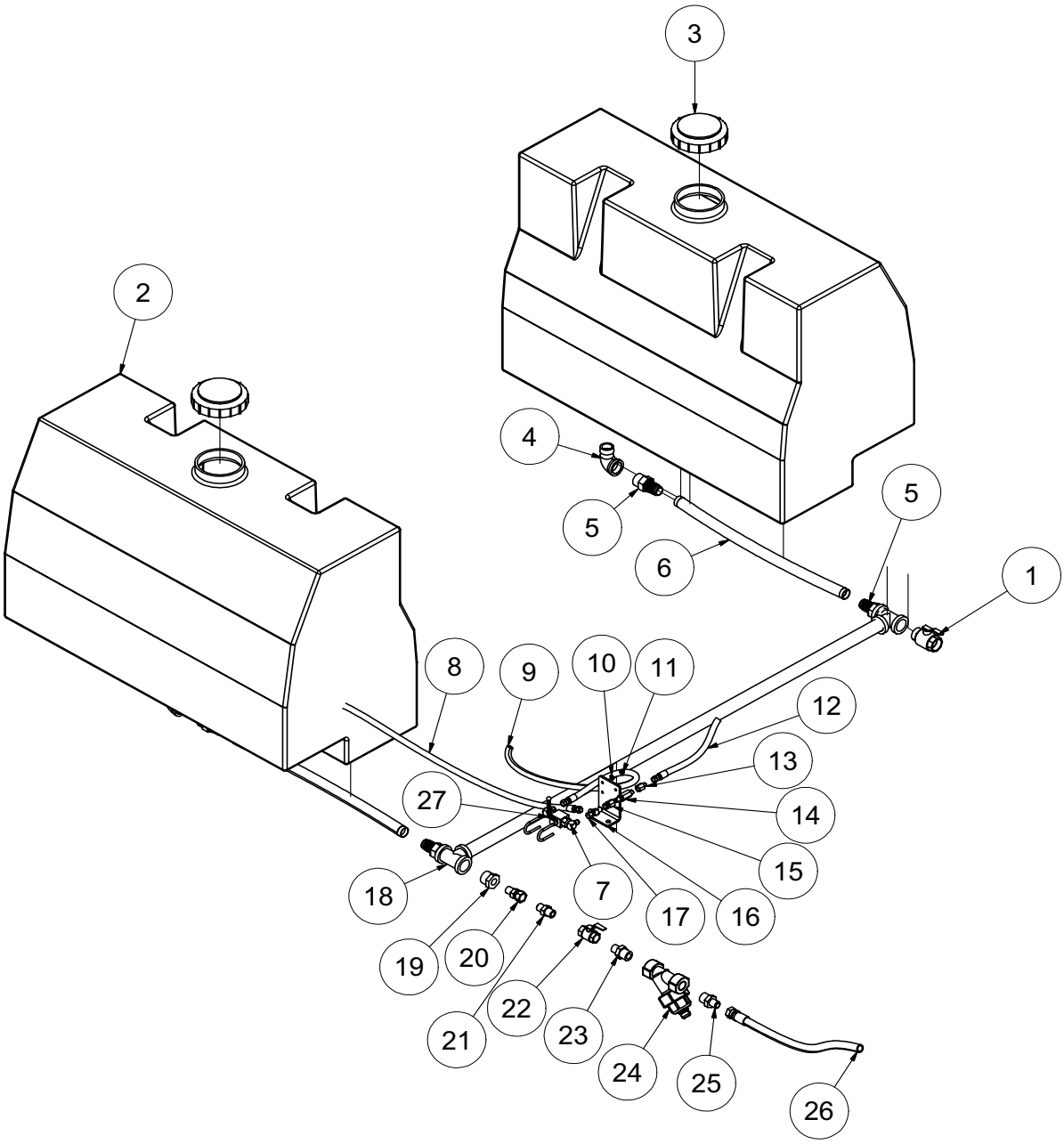

112910-E

VACASSY615

Water Tank Assembly

125 Gallon Saddle Tanks (Skid)

ITEM	QTY	PART NO.	DESCRIPTION
1	1	8045813	VALVE,BALL 1 1/4" M X F BRASS
2	1	8046162	TANK, WATER 125GAL (CURB SIDE)
	1	8045093	BULKHEAD 1 1/4" BOTTOM FEED
	1	8040782	TANK, WATER 125GAL (STRRET SIDE)
	1	8045093	BULKHEAD 1 1/4" BOTTOM FEED
3	2	8041119	WATER TANK LID
4	2	8041311	ELBOW, STREET 1 1/4"
5	4	8041312	FITTING, HOSE BARB 1 1/4"
6	2	8041523	HOSE, VAC CLEAR VINYL 1 1/4" - 24
7	2	T401102	ELBOW, 6MJ - 6MP
8	1	8041477	HOSE REEL TO BALL VALVE 6 -140 ST-ST
9	1	8043949	BALL VALVE TO TANK CLEANOUT 6-215 ST-90
10	4	U200020	WASHER, FLAT 1/4"
11	4	U120100	NUT, LOCK 1/4"-20
12	1	8043664	BALL VALVE TO WATER PUMP 6-36 ST-90
13	1	8031126	UNION, 4FP - 6MJ
14	1	8030923	FILTER, WATER HIGH PRESSURE
15	1	8031125	REDUCER, 1/4"FP - 3/8"FJ
16	1	8040670	BALL VALVE BRACKET
17	1	T402153	TEE, 6MJ - 6MJ - 6FJ
18	2	8041310	TEE, 1 1/4"FP - 1 1/4"FP - 1 1/4"FP
19	1	T403100	REDUCER, 20MP - 12FP
20	1	T400101	UNION, 12FJ - 12MP
21	1	T400100	UNION, 12MJ - 12MP
22	1	T000185	BALL VALVE, BRASS 3/4"FP
23	1	T404060	REDUCER, 16MP - 12MP
24	1	8040186	STRAINER
	1	8040186-1	END CAP
	1	8040186-2	GASKET
	1	8040186-3	STRAINER PLUG
	1	8040186-4	FKM O-RING
	1	8040186-5	STRAINER MESH SCREEN 80
	1	8040186-6	Y-BODY
	1	8040186-7	EPDM O-RING
25	1	T400450	REDUCER, 12MJ - 16MP
26	1	8041058	HOSE VAC PUSH 12-36
	2	8030525	FITTING HOSE 12FJ PUSHLOCK
27	1	8030351	BALL VALVE 3/8"
	2	U010017	U-BOLT .250 - 20
*	1	8043806	SWITCH, WATER TANK BOTTOM SHORT
*	1	8046803	HOSE VAC PUSH 8-79
*	2	8030524	FITTING, PUSH LOCK #8
*	1	8030518	ELBOW, 45 1/2"MJ BULKHEAD

* NOT SHOWN

Water Tank Assembly 230 GAL

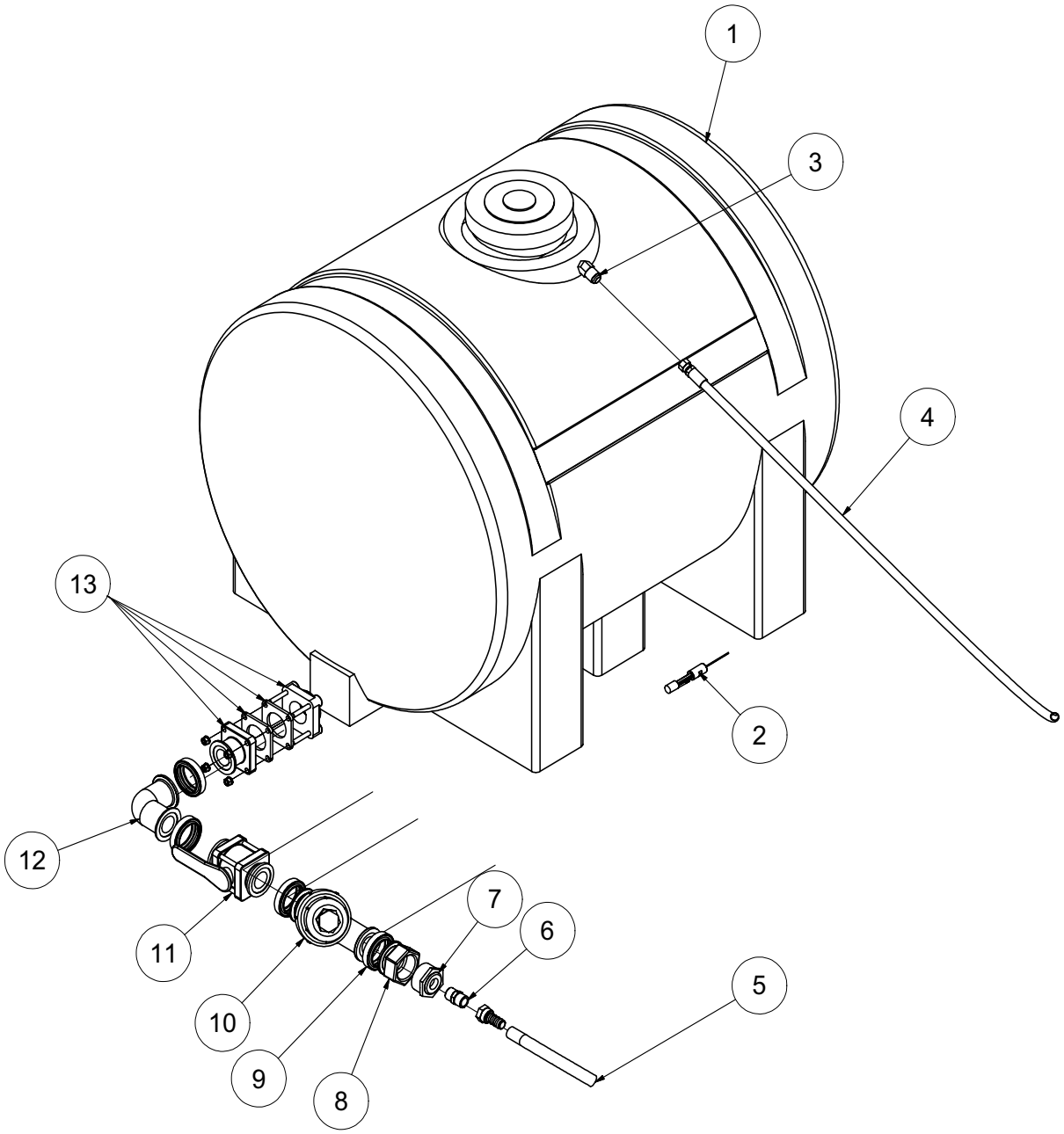

030614-E

VACASSY604

Water Tank Assembly 230 GAL

ITEM	QTY	NUMBER	DESCRIPTION
1	1	8030338	230 GALLON WATER TANK
	2	8040084	WATER TANK STRAP
	1	8030931	WATER TANK LID
2	1	8045386	WATER LEVEL SWITCH, LONG
3	1	8030518	BULKHEAD 45 DEG, 8MJ
4	1	8041465	HOSE, BYPASS 230 WATER TANK
	2	8030524	PUSH LOCK HOSE FITTING 8FJ
5	1	8041467	HOSE, SUCTION
	2	8030524	PUSH LOCK HOSE FITTING 12FJ
6	1	T400100	UNION, 12MP - 12MJ
7	1	8031134	BUSHING, 2" X 3/4"NPT BANJO
8	1	8030996	ADAPTER, FEMALE 2" BANJO
9	4	8031000	CLAMP, WATER MANIFOLD
10	1	8031001	Y-STRAINER, 2" BANJO
	1	8031001-1	SP MANIFOLD BODY
	1	8031001-2	STRAINER CAP
	1	8031001-3	PLUG
	1	8031001-4	O-RING
	1	8031001-5	2" SP EPDM GASKET
	1	8031001-6	2" SP VITON GASKET
	1	8031001-7	EPDM O-RING
	1	8031001-8	2" 80 MESH SCREEN
11	1	8030998	BALL VALVE, 1 1/2" ID BANJO
12	1	8030995	ELBOW, 2" BANJO
13	1	80309971	FLANGE, 2" BANJO
	1	80309972	FLANGE GASKET, 2" BANJO
	1	80309972	FLANGE GASKET, 2" BANJO
	1	80309973	FLANGE BOLTED, 2" BANJO
	4	U100060	NUT, HEX 3/8-16
	4	U210060	WASHER, LOCK 3/8

030614-E

VACASSY604

Water Tank Assembly

410 TANK

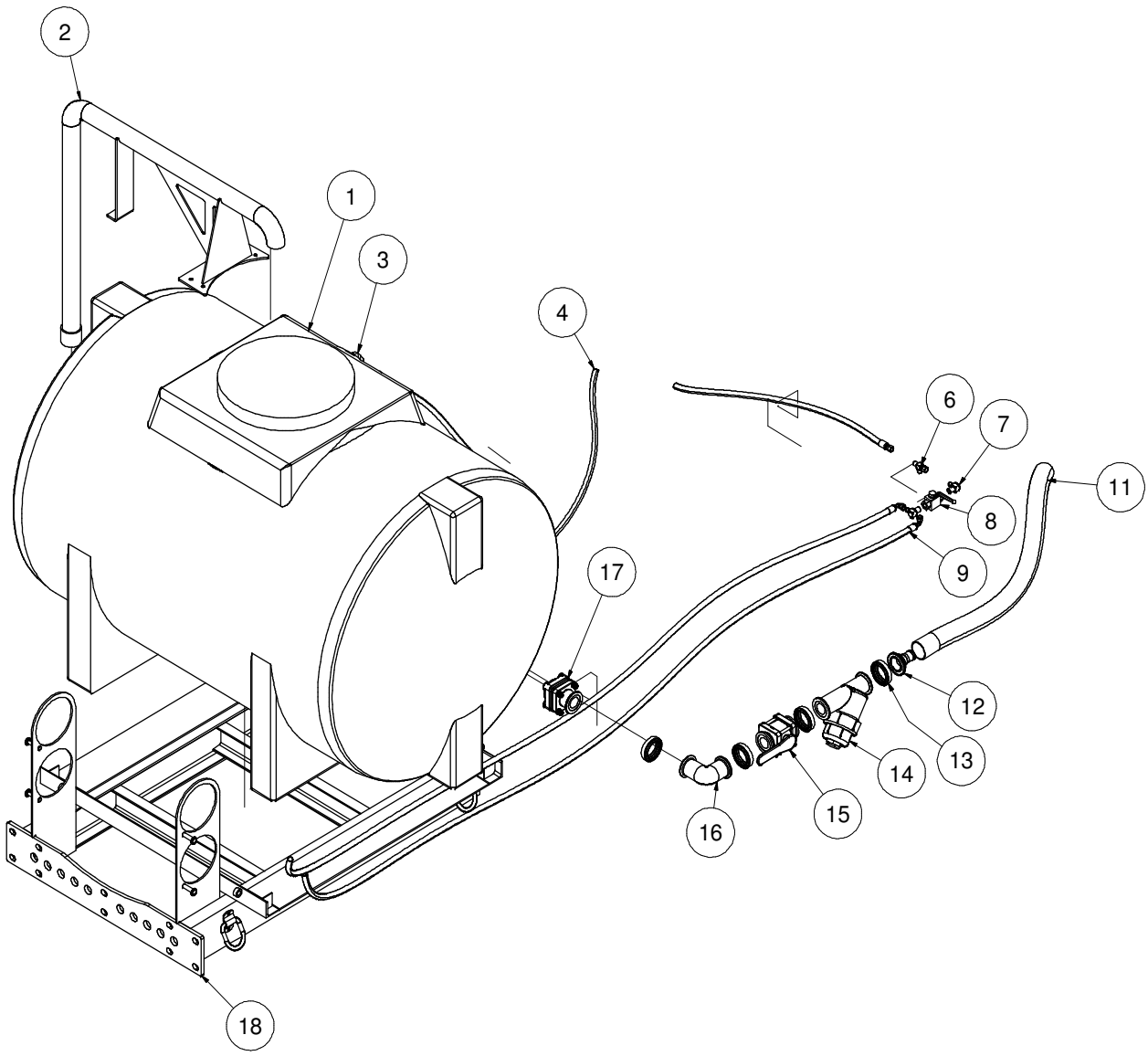

030614-E

VACASSY605

Water Tank Assembly 410 TANK

ITEM	QTY	NUMBER	DESCRIPTION
1	1	8031121	410 GALLON WATER TANK
	2	8041535	WATER TANK STRAP
	1	8031121-1	410 GALLON WATER TANK LID
2	1	8041067	QUICK FILL
	4	U000425	SCREW HC 3/8"-16 X 1"
	8	U200600	WASHER FLAT 3/8"
	4	U210060	WASHER, LOCK 3/8"
	4	U100060	NUT, HEX 3/8"-16
3	1	8030518	1/2” BULKHEAD 45 DEG.
4	1	8042184	HOSE ASSY VAC 8-80 ST-ST
5	1	8042179	HOSE ASSY VAC 6-36 ST-ST
6	1	T402153	TEE #6MJ - #6MJ - #6FJ
7	2	T401102	ELBOW, #6MJ - 3/8"MP
8	1	8030351	3/8" BALL VALVE
9	1	8042178	HOSE ASSY VAC 6-155 ST-90
10	1	8042177	HOSE ASSY VAC 6-254 ST - ST
11	1	8042189	HOSE VAC CLEAR VINYL 1 1/4-36
12	1	8041999	FLANGED HOSE BARB 1 1/4" - 2"
13	4	8031000	CLAMP, WATER MANIFOLD
14	1	8031001	Y-STRAINER, 2” BANJO
	1	8031001-1	2” SP MANIFOLD BODY
	1	8031001-2	STRAINER CAP
	1	8031001-3	PLUG
	1	8031001-4	O-RING
	1	8031001-5	2”SP EPDM GASKET
	1	8031001-6	2” SP VITON GASKET
	1	8031001-7	EPDM O-RING
	1	8031001-8	2” 80 MESH SCREEN
15	1	8030998	BALL VALVE, 1-1/2 ID BANJO
16	1	8030995	ELBOW, 2” BANJO
17	1	80309971	FLANGE, 2” BANJO
	1	80309972	FLANGE GASKET, 2” BANJO
	1	80309972	FLANGE GASKET, 2” BANJO
	1	80309973	FLANGE BOLTED, 2” BANJO
	4	U100060	NUT, HEX 3/8-16
	4	U210060	WASHER, LOCK 3/8
18	1	8049116	SKID, 410 WATER TANK
*	1	8045386	SWITCH, WATER SHUTOFF LONG

* NOT SHOWN

030614-E

VACASSY605

Water Tank Assembly

205 Gallon Saddle Tanks (Skid)

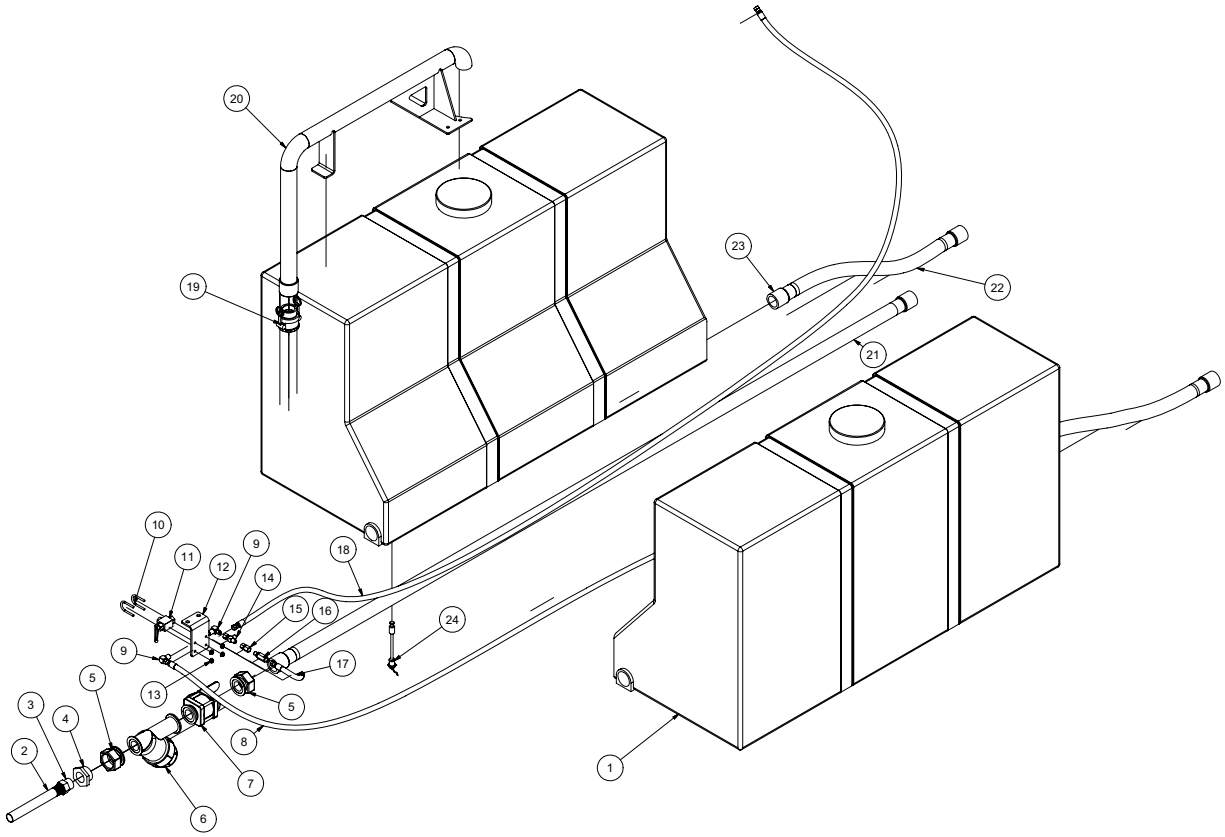

110311-E

VACASSY616

Water Tank Assembly

205 Gallon Saddle Tanks (Skid)

ITEM	QTY	NUMBER	DESCRIPTION
1	2	8043805	TANK, WATER 205 GAL. POLY.
	2	8043805-3	TANK, WATER LID 205GAL
*	1	8030518	1/2" BULKHEAD 45 DEG
2	1	8043076	HOSE VAC CLEAR VINLY 1 1/4-37"
3	1	8041312	FITTING HOSE BARB 20HB-20MP
4	1	8043843	REDUCER, 1 1/4"MP - 1/2"FP GALV
5	2	8030996	ADAPTER, FEMALE 2"
6	1	8031001	Y-STRAINER, 2"
	1	8031001-1	2" SP MANIFOLD BODY
	1	8031001-2	STRAINER CAP
	1	8031001-3	PLUG
	1	8031001-4	O-RING
	1	8031001-5	2" SP EPDM GASKET
	1	8031001-6	2" SP VITON GASKET
	1	8031001-7	EPDM O-RING
	1	8031001-8	2" 80 MESH SCREEN
7	1	8030998	BALL VALVE, BANJO 1 1/2"ID
8	1	8043949	BALL VALVE TO TANK CLEAN OUT HOSE #6-215 ST-90
	2	T320040	FITTING, HOSE 6HO-6FJ
9	2	T401102	ELBOW, 6MJ-6MP
10	2	U010017	1 1/2" CLAMP HOOK 1/4-20 THD
11	1	8030351	STEEL BALL VALVE, 3/8" NPT
12	1	8040670	BALL VALVE BRACKET
13	8	U120142	NUT, LOCK FLANGED .250-20 G2
	8	U200020	WASHER, FLAT 1/4"
14	1	T402153	TEE, 6MJ-6MJ-6FJ
15	1	8031125	UNION, 4FP-6FJ
16	1	8030923	FILTER, WATER HIGH PRESSURE
17	1	8043664	BALL VALVE TO WATER PUMP HOSE #6-36 ST-90
18	1	8041477	HOSE REEL TO BALL VALVE HOSE #6-140 ST-ST
	2	T320040	FITTING, HOSE 6HO-6FJ
19	1	8031219	COUPLING, 2" ALUM MP X FCAMLOCK
20	1	8046528	QUICK FILL 205 GAL
21	1	8045635	HOSE VAC CLEAR VINLY 2"-122
	2	8043397	CLAMP VAC CLEAR HOSE 2"
22	2	8045636	HOSE VAC CLEAR VINLY 2"-36
	2	8043397	CLAMP VAC CLEAR HOSE 2"
23	6	T410115	HOSE BARB 2"
24	1	8045386	SWITCH, WATER TANK BOTTOM LONG

* NOT SHOWN

Hose Reel Assembly

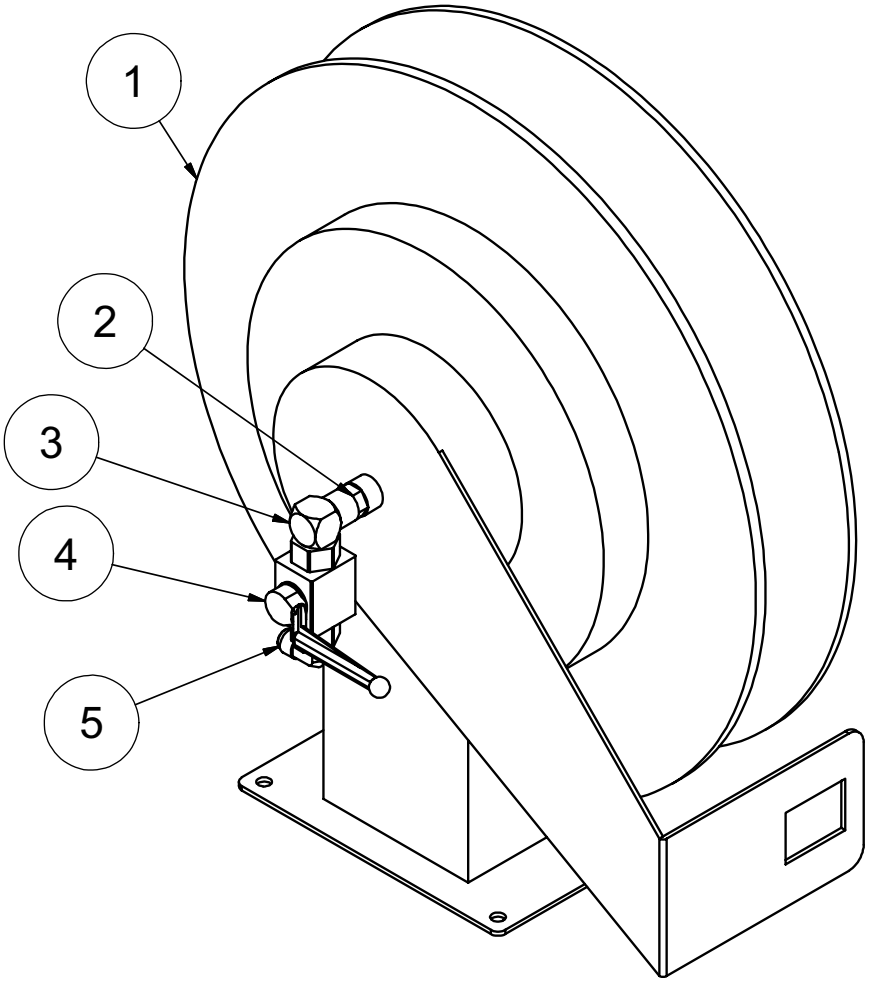

081010-E

VACASSY763

Hose Reel Assembly

ITEM	QTY	NUMBER	DESCRIPTION
1	1	8031240	REEL with HOSE SPRINGDRIVEN 3/8” X 50’
2	1	8031269	UNION, 1/2”MP - 3/8”MP
3	1	T401065	ELBOW, 3/8”MP - 3/8”FP
4	1	8030351	STEEL BALL VALVE - 3/8”NPT
5	1	8030498	ELBOW, 3/8”MP - 3/8”MJ 90

081010-E

VACASSY763

Hose Reel Components

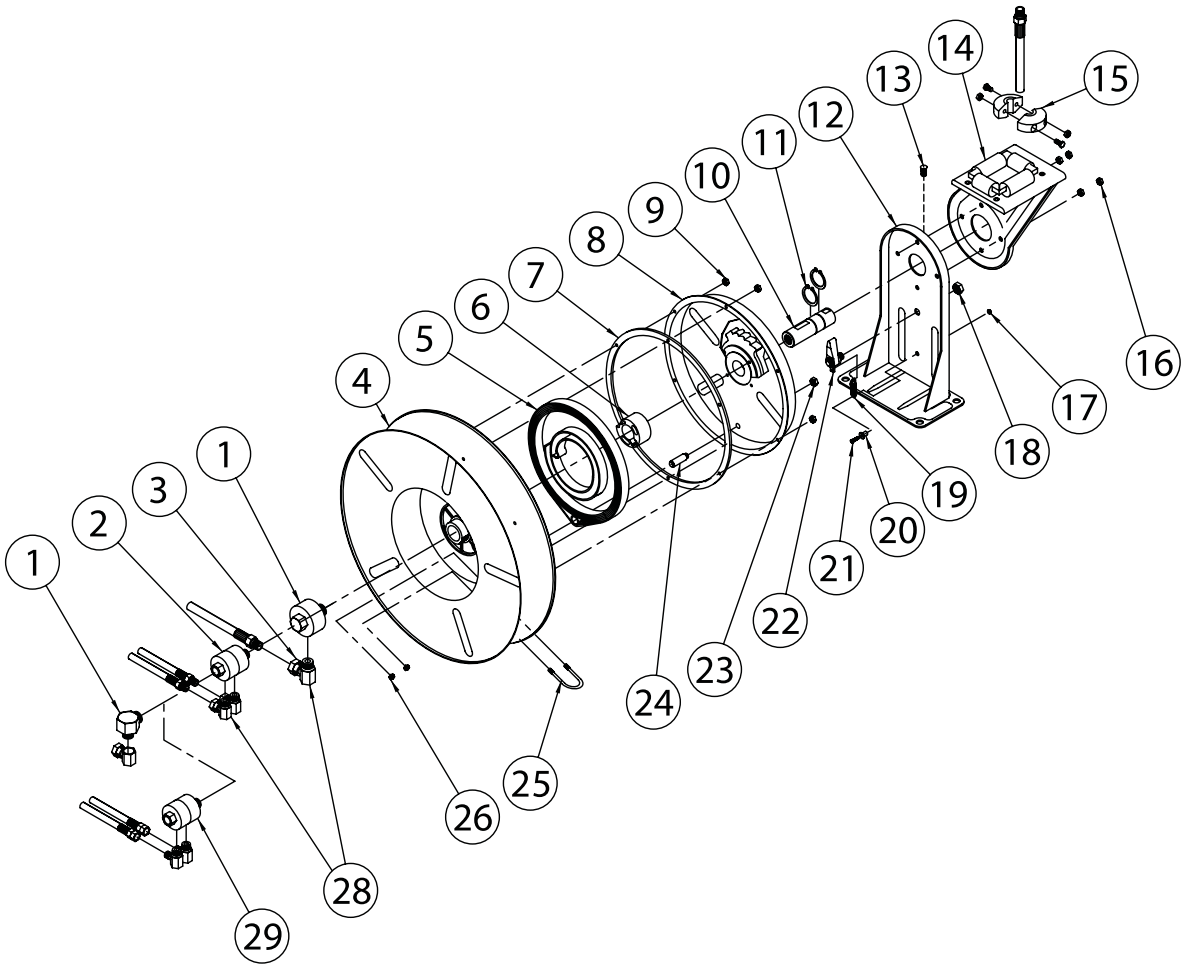

081010-E

VACASSY764

Hose Reel Components

ITEM	QTY	NUMBER	DESCRIPTION
		8031240	REEL with HOSE SPRINGDRIVEN 3/8" X 50'
1	1	8031240-1	SWIVEL ASSEMBLY
2	1	8031240-2	SWIVEL & ELL ASSEMBLY
3	1	8031240-3	90 DEG ELL
4	1	8031240-4	SHEAVE ASSEMBLY
5	1	8031240-5	DRIVE SPRING ASSEMBLY
6	1	8031240-6	SPRING ARBOR ASSEMBLY
7	1	8031240-7	GASKET
8	1	8031240-8	SPRING CASE ASSEMBLY
9	6	8031240-9	10-32 HEX LOCKNUT
10	1	8031240-10	MAIN SHAFT
11	2	8031240-11	1 1/4" SNAP RING
12	1	8031240-12	BASE ASSEMBLY
13	1	8031240-13	1/2"-13 SET SCREW
14	1	8031240-14	GUIDE ARM W/ ROLLERS
15	1	8031240-15	HOSE BUMPER ASSEMBLY
16	4	8031240-16	5/16"-18 LOCKNUT
17	1	8031240-17	10-32 X 3/8" NYLOCK NUT
18	1	8031240-18	1/2"-20 X 5/8" HEX NUT
19	1	8031240-19	LATCH SPRING
20	1	8031240-20	BUSHING
21	1	8031240-21	10-32 X 7/8" SCREW
22	1	8031240-22	LATCH PAWL ASSEMBLY
23	1	8031240-23	3/8"-24 JAM NUT
24	1	8031240-24	SPRING CASE STUD
25	1	8031240-25	U-BOLT
26	4	8031240-26	1/4"-20 X 3/8" LOCKNUT
28	1	8031240-28	SWIVEL UNION

Antifreeze Assembly

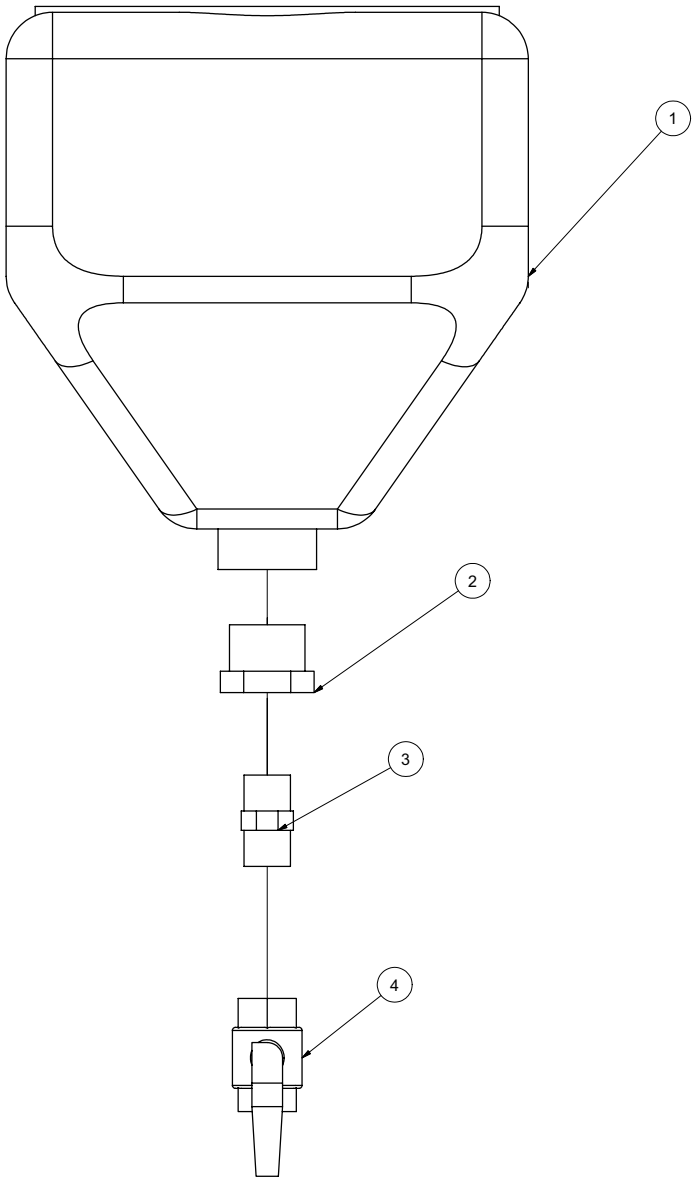

060309

VACASSY943

Antifreeze Assembly

ITEM	QTY	PART NO.	DESCRIPTION
1	1	8030394	ANTI-FREEZE TANK 4 GAL.
	4	U000180	SCREW, HC .312 -18 X .750
	4	U200040	WASHER, FLAT 5/16”
	4	U210040	WASHER, LOCK 5/16”
2	1	T400585	REDUCER, 20MP-12FP
3	1	T400800	UNION, 12MP-12MP
4	1	T000185	BALL VALVE, BRASS 3/4” FP

060309

VACASSY943

Skid Assembly

V1200HD SINGLE

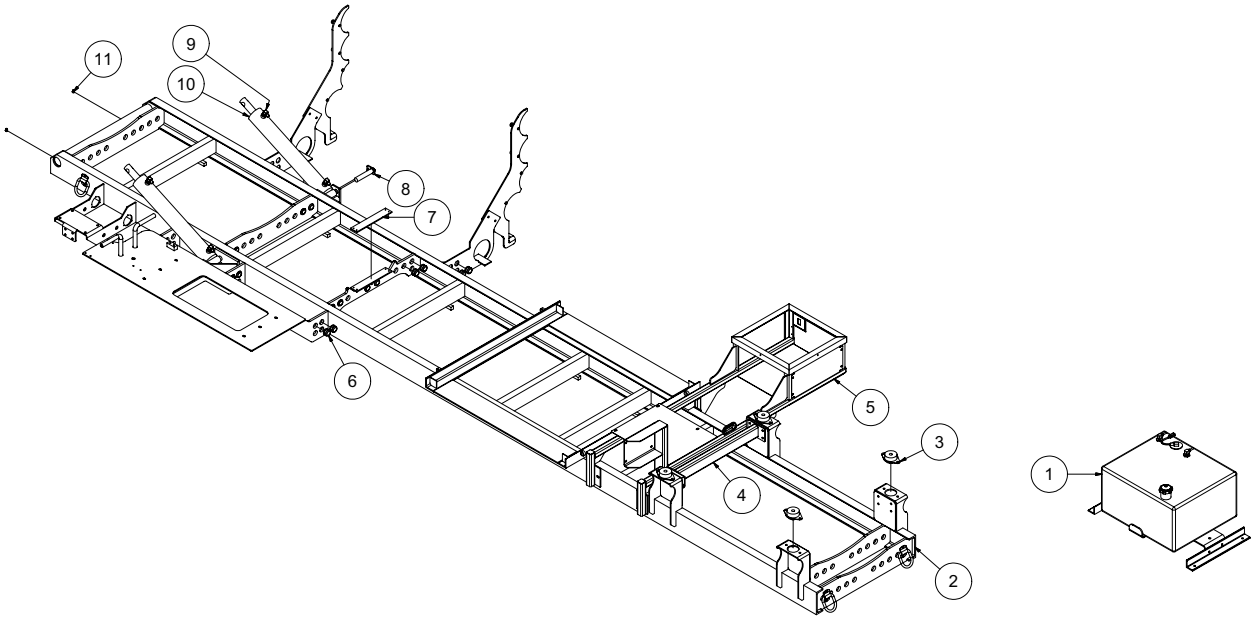

122810-E

VACASSY925

Skid Assembly

V1200HD SINGLE

ITEM	QTY	PART #	DESCRIPTION
1	1	8042380	FUEL TANK 22GAL
	1	8043359	STRAP W/ EYEBOLT
	1	8042380-1	FUEL TANK CAP
	1	8041725	FUEL SENDING UNIT
	1	8041725-1	SENDING UNIT GASKET
	1	8045686	FUEL LINE SUPPLY 30”
	2	8043665	FUEL TANK MTG FOOT
	1	8045507	PLATE FUEL TANK HOLDER
2	1	8046833	V1200HD LE SKID ONLY
3	4	8030904	ISOLATOR 840LB
	4	U000560	SCREW, HC 3/8”-16 X 3”
	4	8030851	WASHER, SNUBBLING
	4	U120110	NUT, LOCK 3/8”
	8	U000420	SCREW, HC 3/8”-16 X 1”
	24	U200060	WASHER, FLAT 3/8”-16
	8	U210060	WASHER, LOCK 3/8”
	8	U100060	NUT, HEX 3/8”-16
4	1	8046243	AIR FILTER BRACKET LE
5	1	8046664	AIR FILTER HOT BOX BRACKET LE
6	16	8041686	GROMMET 1”ID - 1 1/4”DOG - 1/4”WO
7	1	8045787	STRIP, PLASTIC TANK FOOT LE
8	2	8043844	PIN CYLINDER V1200
9	4	T401270	ELBOW, 90 1/2”MB - 3/8”MJ
10	2	8043642	CYLINDER, HYD. 3.5” X 20” V1200
11	2	T500060	FITTING, GREASE .125 90DEG

DOOR HOSES

*	2	8042928	HYD HOSE TO DOOR CYLINDER BASE END 4-38” ST-ST
*	2	8043304	HYD HOSE TO DOOR CYLINDER ROD END 4-47” ST-ST
*	1	8046932	HYD HOSE, DOOR CYLINDER SUPPLY 4-206” ST-90
*	1	8046932	HYD HOSE, DOOR CYLINDER RETURN 4-206” ST-90
*	2	T402035	TEE, 1/4”MJ - 1/4”MJ - 1/4”MJ

TANK HOSES

*	2	8042948	HYD HOSE TO TANK CYLINDER BASE END 6-36” ST-ST
*	2	8046933	HYD HOSE TO TANK CYLINDER ROD END 6-57” ST-ST
*	1	8046934	HYD HOSE, TANK CYLINDER SUPPLY 6-132” ST-90
*	1	8046934	HYD HOSE, TANK CYLINDER RETURN 6-132” ST-90
*	2	T402154	TEE, 3/8”MJ - 3/8”MJ - 3/8”MJ

Skid Assembly

V1200HD
SADDLE TANKS

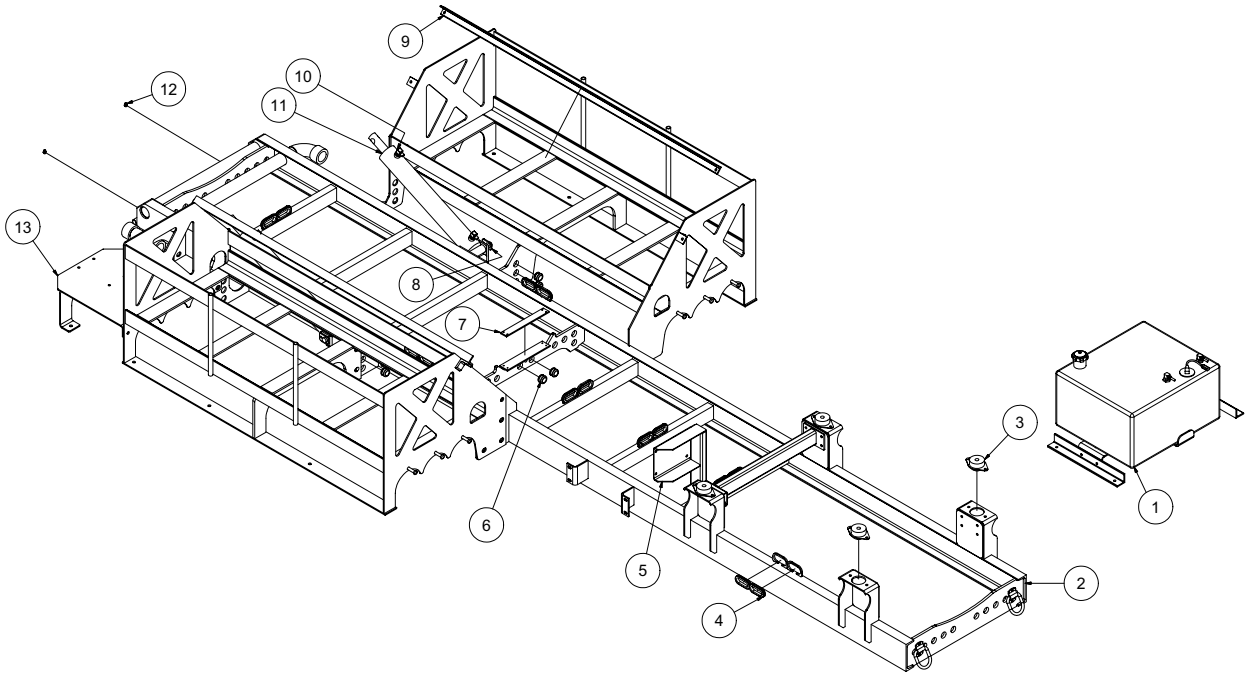

100112-E

VACASSY926

Skid Assembly

V1200HD SADDLE TANKS

ITEM	QTY	PART #	DESCRIPTION
1	1	8042380	FUEL TANK 22GAL
	1	8043359	STRAP W/ EYEBOLT
	1	8042380-1	FUEL TANK CAP
	1	8041725	FUEL SENDING UNIT
	1	8041725-1	SENDING UNIT GASKET
	1	8045686	FUEL LINE SUPPLY 30”
	2	8043665	FUEL TANK MTG FOOT
	1	8045507	PLATE FUEL TANK HOLDER
2	1	8048417	SKID ONLY V1200HD/XT AW
3	4	8030904	ISOLATOR 840LB
	4	U000560	SCREW, HC 3/8”-16 X 3”
	4	8030851	WASHER, SNUBBLING
	4	U120110	NUT, LOCK 3/8”
	8	U000420	SCREW, HC 3/8”-16 X 1”
	24	U200060	WASHER, FLAT 3/8”-16
	8	U210060	WASHER, LOCK 3/8”
	8	U100060	NUT, HEX 3/8”-16
4	14	8042812	GROMMET 2”ID - 3”OD - 1/4”WOG TRAILER SLOT MODEL
5	1	8046243	AIR FILTER BRACKET LE
6	2	8041686	GROMMET 1”ID - 1 1/4”DOG - 1/4”WO
7	1	8045787	STRIP PLASTIC TANK FOOT LE
8	2	8043844	PIN CYLINDER 1” X 5 1/2”
9	2	8044390	WATER TANK ANGLE HOLDER
10	4	T401270	ELBOW, 90 1/2”MB - 3/8”MJ
11	2	8043642	CYLINDER, HYD. 3.5” X 20” V1200
12	2	T500060	FITTING, GREASE .125 90DEG
13	1	8048508	BRACKET, HOSE REEL SKID
DOOR HOSES			
*	2	8045870	HYD HOSE TO DOOR CYLINDER BASE END 4-41” ST-ST
*	2	8042927	HYD HOSE TO DOOR CYLINDER ROD END 4-50” ST-ST
*	1	8046936	HYD HOSE, DOOR CYLINDER SUPPLY 4-158” ST-90
*	1	8046936	HYD HOSE, DOOR CYLINDER RETURN 4-158” ST-90
*	2	T402035	TEE, 1/4”MJ - 1/4”MJ - 1/4”MJ
TANK HOSES			
*	2	8042948	HYD HOSE TO TANK CYLINDER BASE END 6-36” ST-ST
*	2	8046933	HYD HOSE TO TANK CYLINDER ROD END 6-57” ST-ST
*	1	8046935	HYD HOSE, TANK CYLINDER SUPPLY 6-94” ST-90
*	1	8046935	HYD HOSE, TANK CYLINDER RETURN 6-94” ST-90
*	2	T402154	TEE, 3/8”MJ - 3/8”MJ - 3/8”MJ

HOSES

4”

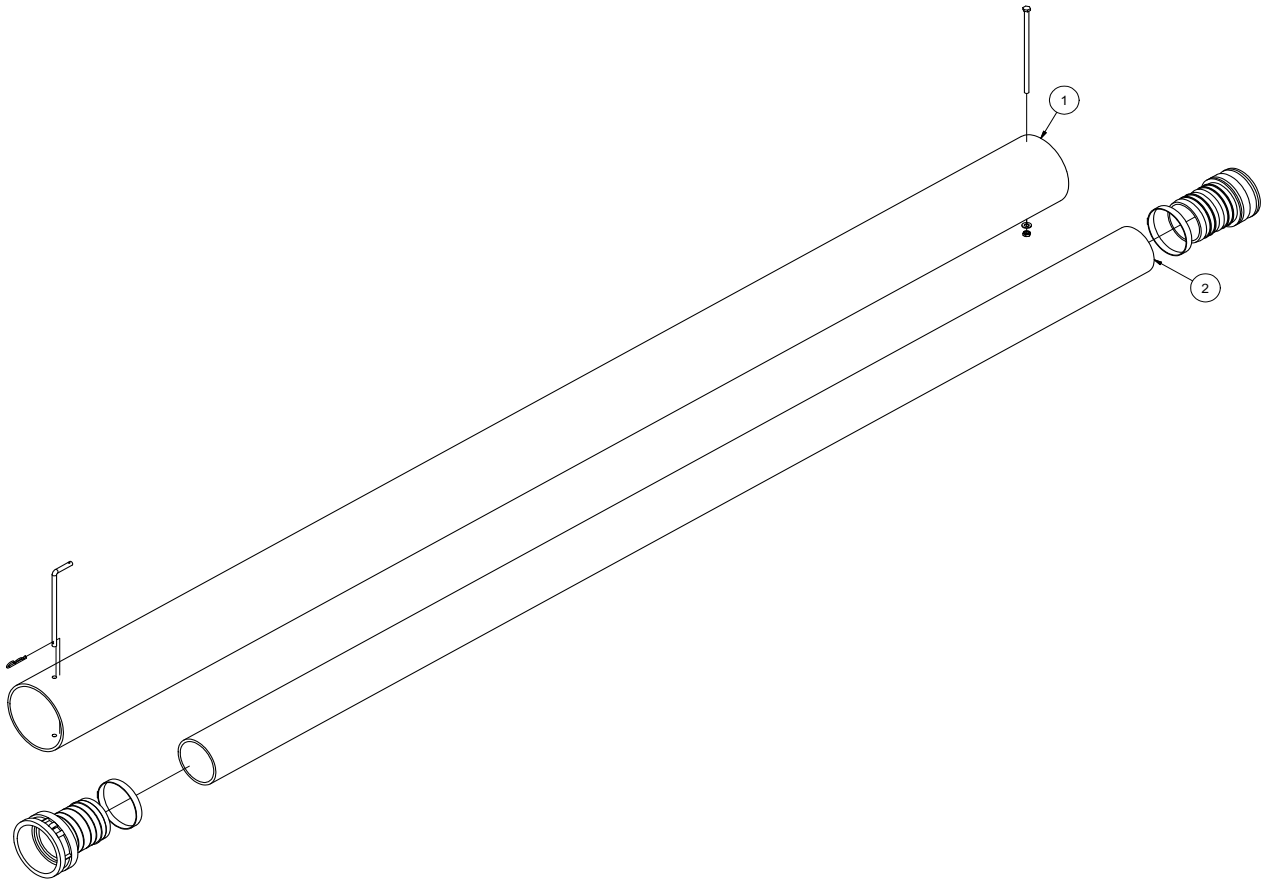

HOSES 4”

ITEM	QTY	PART NO.	DESCRIPTION
1	1	8041102	6”PVC STORAGE TUBE 10’LG
	1	U000626	SCREW, HC .375-16 X 7.50”
	1	8041485	LANYARD CABLE
	1	8043198	HOSE STORAGE CLAMP
	2	U200060	WASHER. FLAT 3/8”
	2	U100060	NUT, HEX 3/8”
	1	8041101	HOSE STORAGE RETAINING ROD
	1	R700170	R-CLIP, 1/2 - 5/8 SHANK
2	1	8042310	HOSE VAC KANAFLEX 4-112
	1	8046444	CAMLOCK, 4” AL FCAM X MBARB
	1	8046443	CAMLOCK, 4” AL MCAM X MBARB
	2	8030912	CLAMP,4.5"PUNCHLOKP18-S

Tool Rack Assembly HD

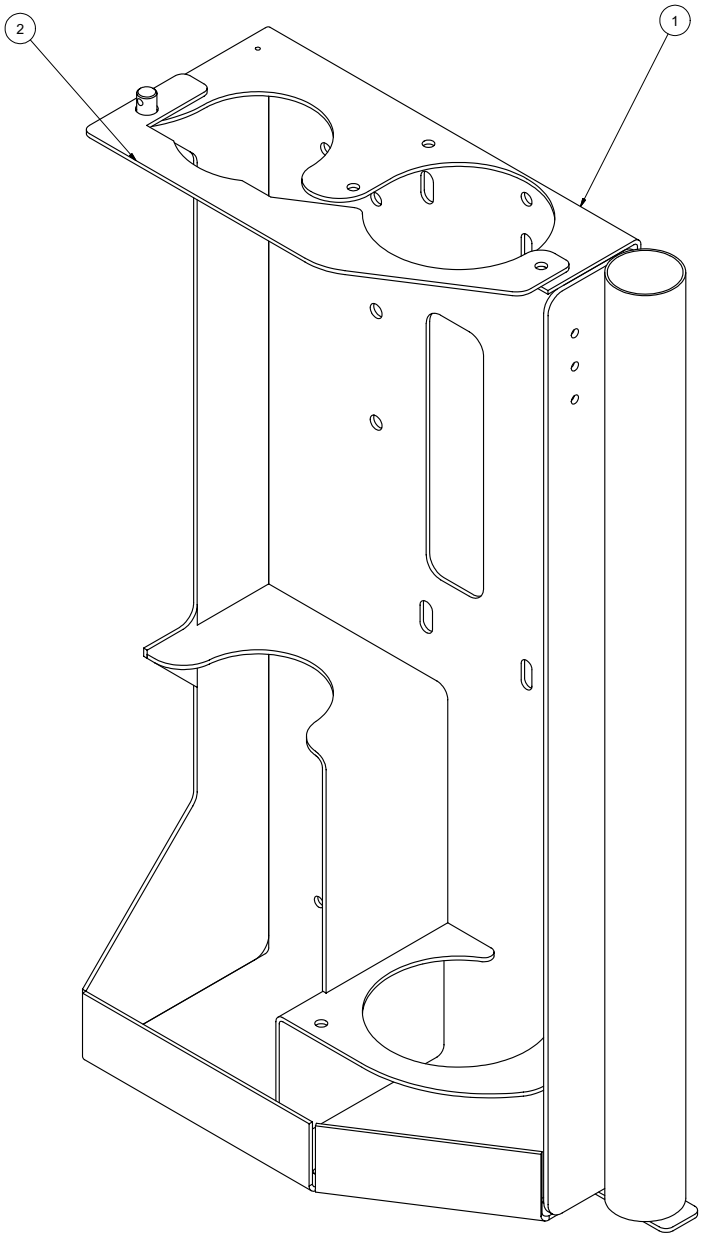

I-BEAM TRAILER

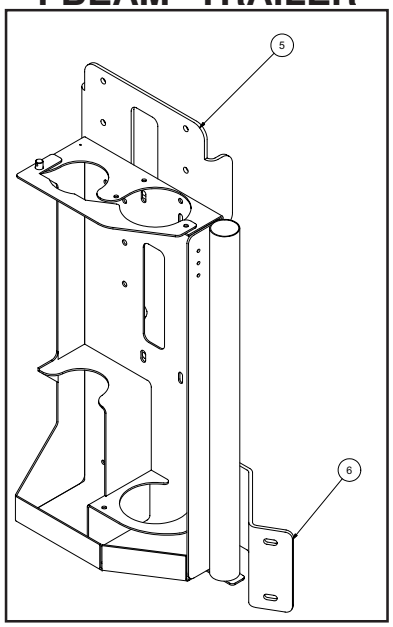

SKID UNIT

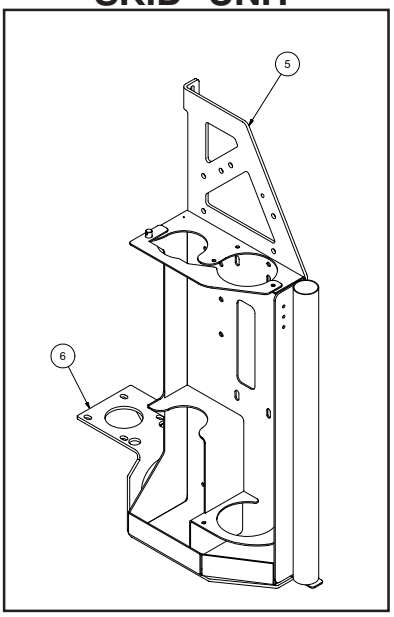

100112-E

VACASSY758

Tool Rack Assembly HD

ITEM	QTY	PART NO.	DESCRIPTION
1	1	8040985	TOOL RACK WELDMENT, HD
2	1	8040989	TOOL RACK CLOSURE, HD
	1	R700175	R CLIP 7/8”
	1	8041259	STRAP, 10”
	1	8041485	LANYARD CABLE
	1	8041244	CLEVIS PIN 1/2” DIA. 3/4”
3	1	8044818	ANTIFREEZE BRACKET (I-BEAM TRAILER)
	4	U000020	SCREW, HC 5/16 - 18 X 1.00”
	4	U000180	SCREW, HC 5/16 - 18 X .750”
	16	U200040	WASHER, FLAT 5/16”
	8	U210041	NUT, LOCK, NY 5/16”
4	1	8044817	TOOL RACK BRACKET (I-BEAM TRAILER)
	3	U000420	SCREW, HC .375 - 16 X 1.00
	3	U120110	NUT, LOCK .375 - 16
	6	U200600	WASHER, FLAT .375
5	1	8041780	ENCLOSURE STIFFENER BRACE (SKID UNITS)
	4	U000040	SCREW, HC 1/4”-20 X .750”
	8	U200020	WASHER, FLAT .250”
	4	U120100	NUT, LOCK .250”
6	1	8043601	TOOL RACK BRACKET - VK (SKID UNITS)
	4	U000420	SCREW, HC .375”-16 X 1.00”
	8	U200060	WASHER, FLAT .375”
	4	U120110	NUT, LOCK .375-16
	2	U000040	SCREW, HC 1/4”-20 X .750”
	4	U200020	WASHER, FLAT .250”
	2	U120100	NUT, LOCK .250”
*	1	8045610	TOOL RACK 3” TOP INSERT
*	1	8045609	TOOL RACK 3” BOTTOM INSERT

* NOT SHOWN

100112-E

VACASSY758

Tool Rack Assembly Horizontal

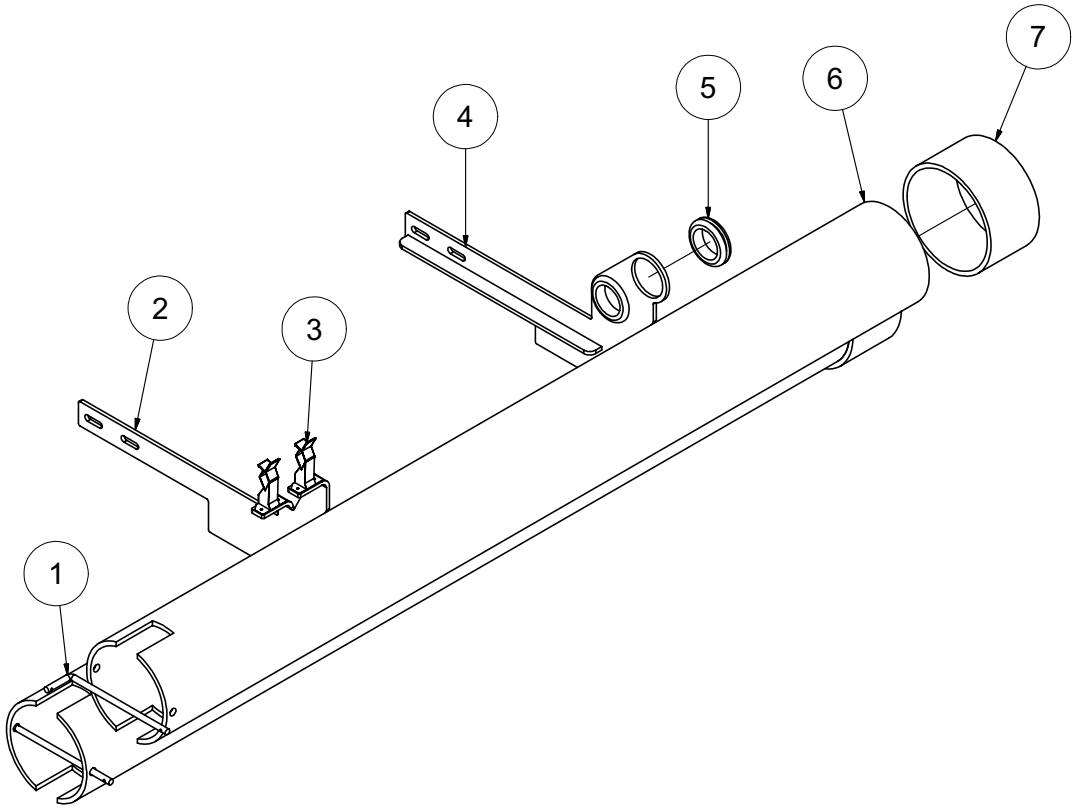

082410-E

VACASSY767

Tool Rack Assembly — Horizontal

ITEM	QTY	PART NO.	DESCRIPTION
1	2	8041101	HOSE STORAGE RETAINING ROD
	2	8041485	LANYARD CABLE
	2	R700160	R-CLIP
2	1	8046722	HOSE STORAGE BRACKET
3	2	8040899	CLIP, TOOL HOLDER
4	1	8046724	HOSE STORAGE BRACKET
5	2	8042812	GROMMET 2”ID 1/4”WOG
6	2	8042222	BOOM EXT. HOSE STORAGE
7	2	8030925	END CAP 6”

Tools (Option) HD Reduction Tool

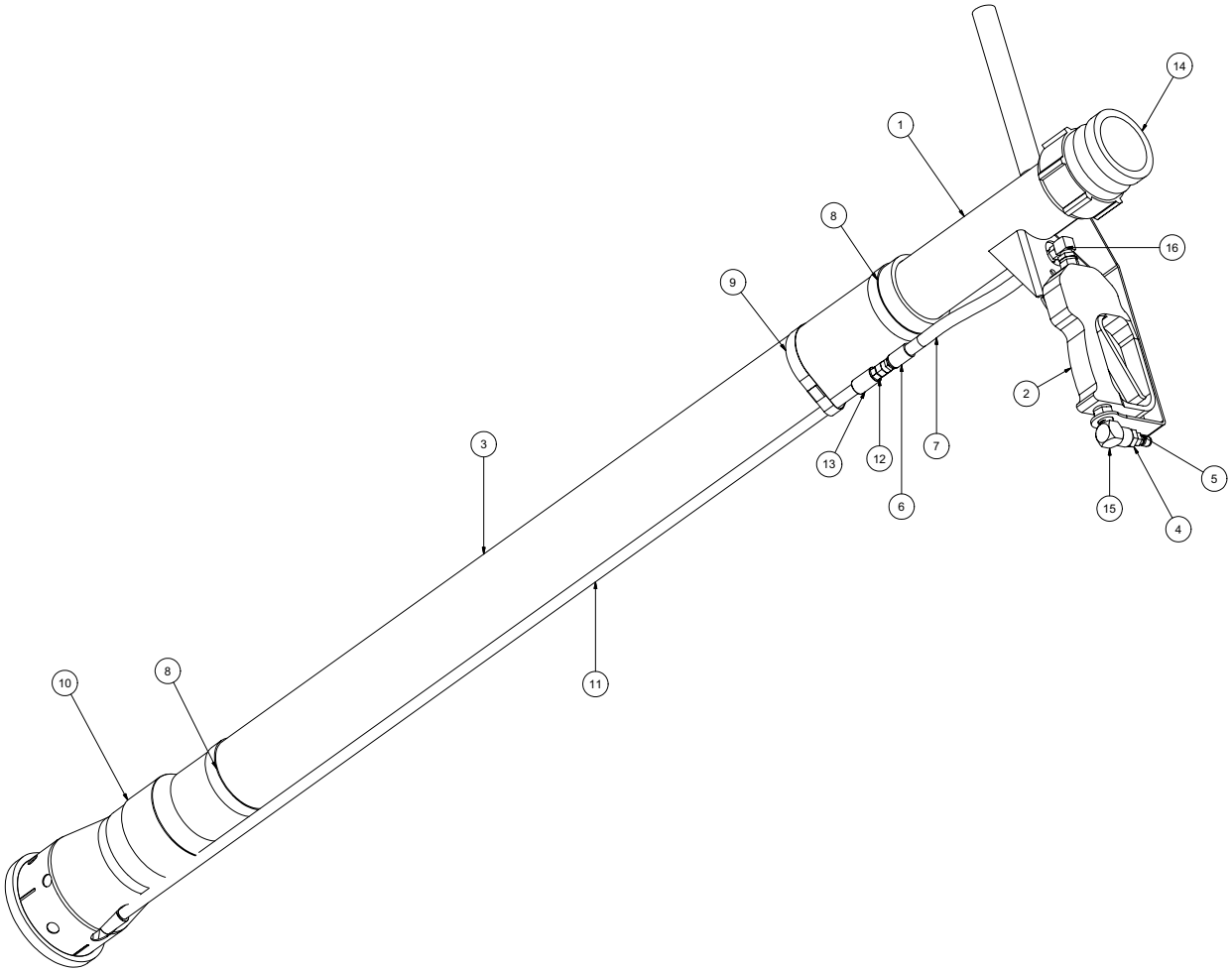

101812-E **VACASSY707**

Tools (Option) HD Reduction Tool

ITEM	QTY	PART NO.	DESCRIPTION
-	-	8043115	TOOL VAC REDUCTION HD COMPLETE
1	1	8042862	TOOL VAC HEAD ASSY 3”
2	1	8048567	STRAIGHT SPRAY GUN
3	1	8042811	TOOL VAC REDUCTION PVC 3" X 48"
4	1	T400023	UNION 6MP 4FP
5	1	8030486	WATER QD 1/4 MNPT SS
6	2	T320030	FITTING, HOSE 4HO 4FJ
7	1	8031278	HOSE ASSEMBLY REDUCTION TOOL
8	2	8030244	VAC CLAMP BAND 3 1/2" PUNCHLOCK
9	1	8030244	VAC CLAMP BAND 3 1/2" PUNCHLOCK
10	1	8041099	TOOL VAC REDUCTION HD LOWER ASSY
11	1	8030247	VAC WATER SUPPLY TUBE
12	1	T400020	UNION 1/4" MP-1/4" MJ STRAIGHT
13	2	T422010	COUPLING,PIPE 1/4"FP
14	1	8030391	BANJO 3" MALE 3" FNPT
15	1	T401065	ELBOW, 3/8 MP - 3/8 FP
16	1	T401100	ELBOW 4MP 4MJ 90
*	2	8030370	REDUCTION TOOL NOZZLE
*	2	8031268	REDUCTION TOOL NOZZLE 45 DEG

* NOT SHOWN

Tools

4” Suction Tool

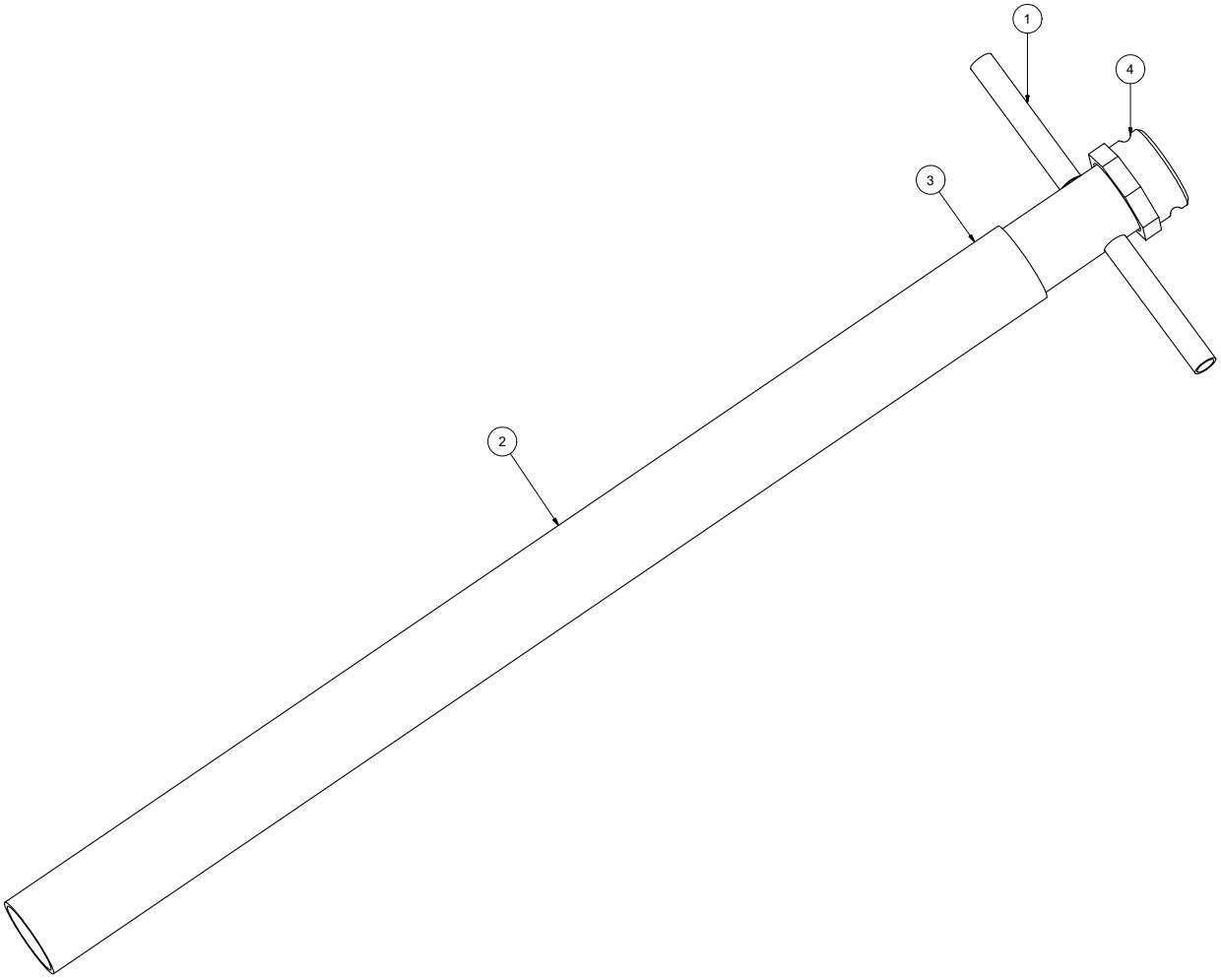

072308

VACASSY710

Tools

4” Suction Tool

ITEM	QTY	NUMBER	DESCRIPTION
	1	8040983	TOOL VAC SUCTION 4" COMPLETE
1	1	8040981	TOOL VAC HANDLE ASSEMBLY 4"
2	1	8040982	PVC VACUUM TUBE 4"
3	1	8030912	CLAMP, 4.5" PUNCHLOK
4	1	8030844	COUPLING, 4" BANJO

072308

VACASSY710

Tools

Wash Wand

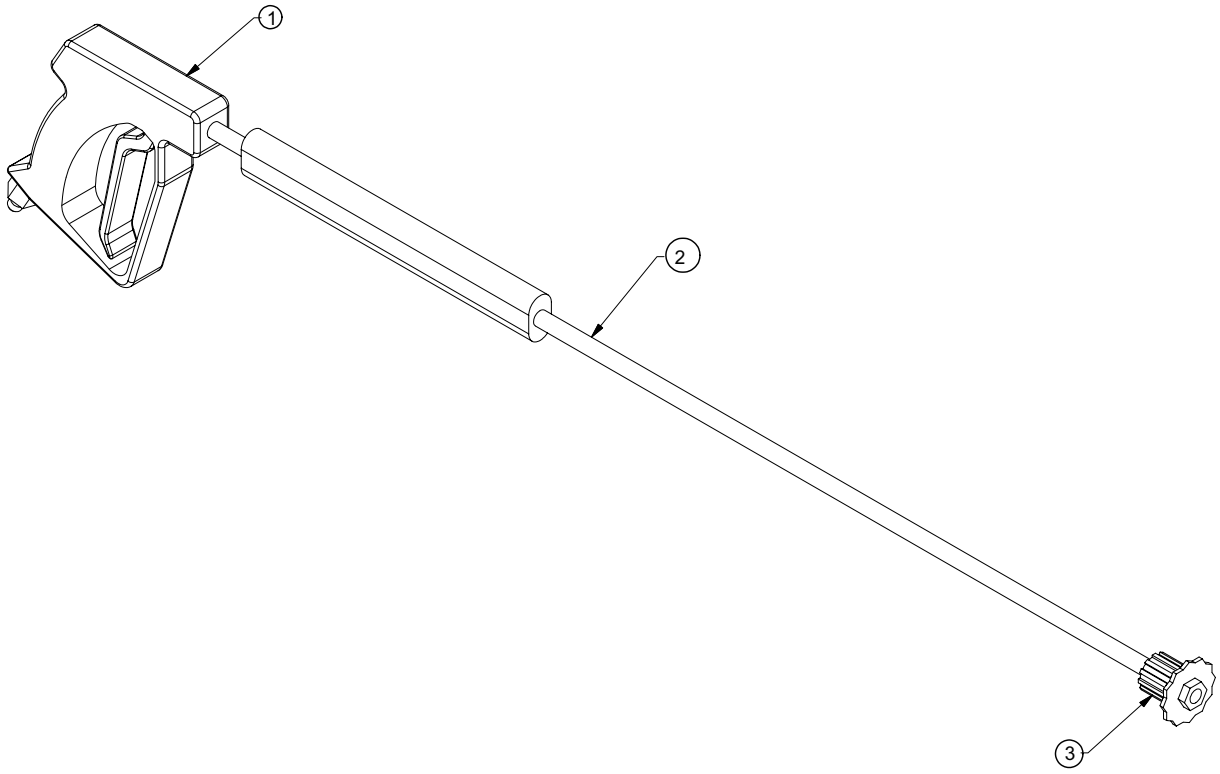

042610-E

VACASSY711

Tools

Wash Wand

Item	Qty	Number	Description
	1	8030348	TOOL VAC SPRAY WAND COMPLETE
1	1	8030928	TRIGGER ASSEMBLY
2	1	8030847	WAND
3	1	8031308	NOZZLE,#6 40 DEGREE FOR WAND

042610-E

VACASSY711

Valve Box Cleanout Tool

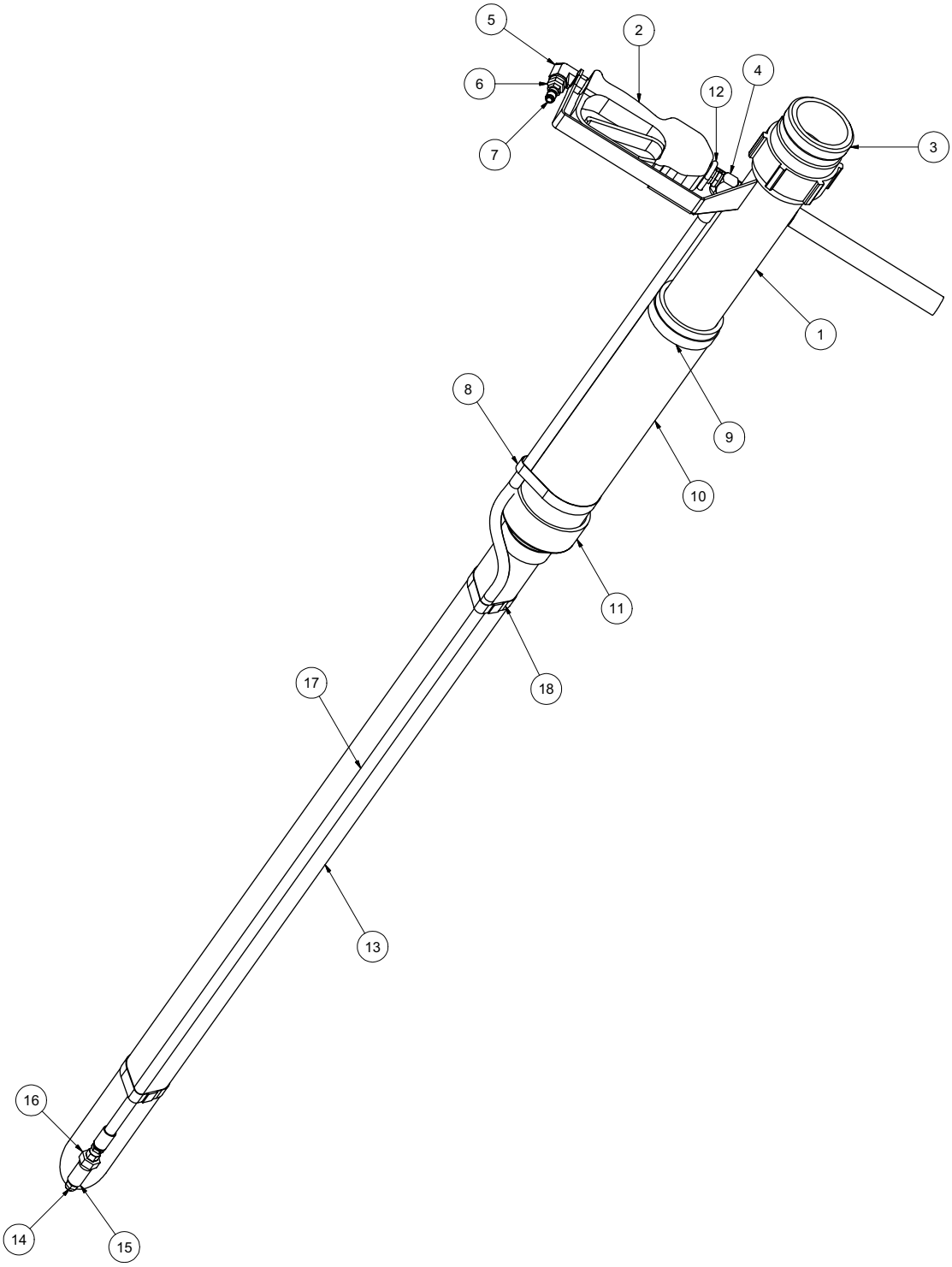

101812-E

VACASSY714

Valve Box Cleanout Tool

ITEM	QTY	PART NO.	DESCRIPTION
	1	8043384	VAC TOOL VALVEBOX CLEANOUT COMPLETE
1	1	8042862	REDUCTION TOOL HEAD WELD'T
2	1	8048567	STRAIGHT SPRAY GUN
3	1	8030391	BANJO 3" MALE FNPT
4	1	T401100	ELBOW 4MP 4MJ 90
5	1	T401065	ELBOW, 3/8 MP - 3/8 FP
6	1	T400023	REDUCER 6MP 4FP
7	1	8030486	WATER QD 1/4 MNPT SS
8	1	8042855	CLAMP HOSE T-BOLT 375
9	1	8042605	CLAMP HOSE T-BOLT 350
10	1	8044096	PVC 3" DIA X 9" LONG
11	1	8030669	REDUCER PVC 3" TO 2" SLIP ON
12	1	U010019	U-BOLT 1_4-20 X 3_4 WIDE X 2 1_4 LONG
13	1	8044097	PVC 2" DIA X 42.5" LG
14	1	8031246	NOZZLE, .100 X 0 DEG
15	1	T422010	COUPLING 1/4"FP
16	1	U400020	UNION, 1/4" MP - 1/4" MJ
17	1	8044098	HOSE ASSY VALVE BOX CLEANOUT TOOL
18	2	8045316	CLAMP, HOSE T-BOLT 275

Tools

Rotary Lance

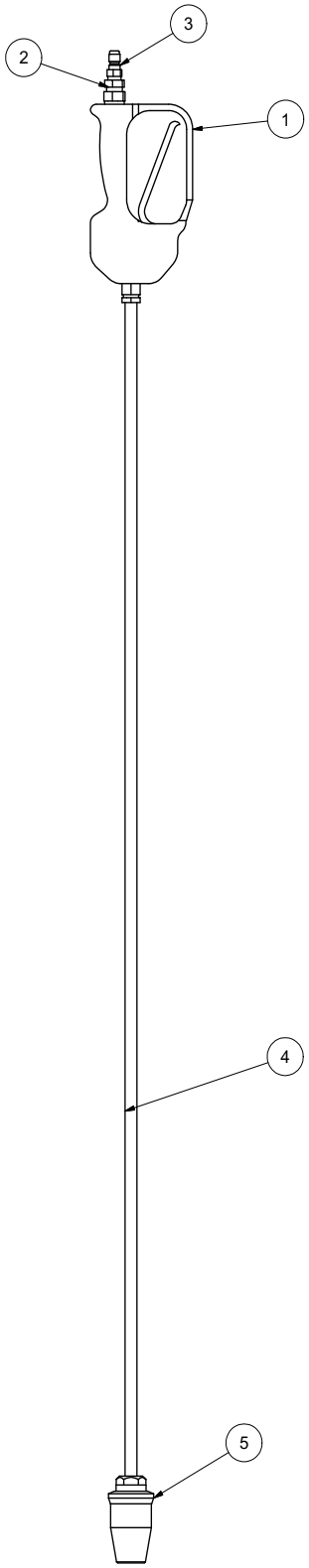

040913-E

VACASSY716

Tools

Rotary Lance

ITEM	QTY	PART NO.	DESCRIPTION
*		8043119	TOOL VAC ROTARY LANCE COMPLETE
1	1	8048567	STRAIGHT SPRAY GUN
2	1	T400023	UNION 6MP-4FP
3	1	8030486	WATER QD 1/4MNPT SS
4	1	8043765	TUBE,CHROME 1/4NPT ENDS 60"
5	1	8042691	ROTARY WOBBLE NOZZLE .080

Tools

Hot Box Rotary Lance

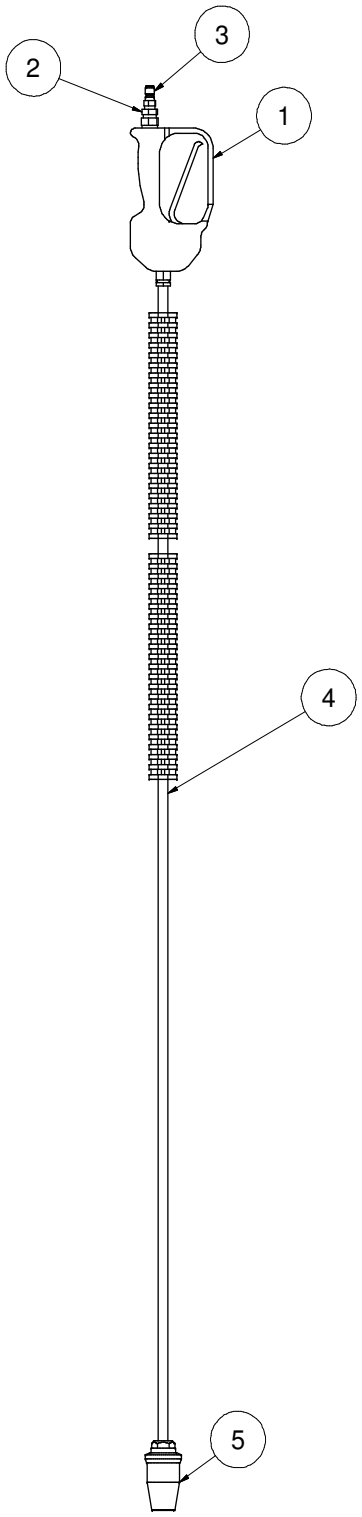

101912-E

VACASSY718

Tools

Hot Box Rotary Lance

ITEM	QTY	PART NO.	DESCRIPTION
*		8048192	TOOL VAC ROTARY LANCE for HOT BOX COMPLETE
1	1	8048567	STRAIGHT SPRAY GUN
2	1	T400023	UNION 6MP-4FP
3	1	8030486	WATER QD 1/4MNPT SS
4	1	8031394	WAND, 59" LONG
5	1	8042691	ROTARY WOBBLE NOZZLE .085

Tools

Lawn Sweeper 3”

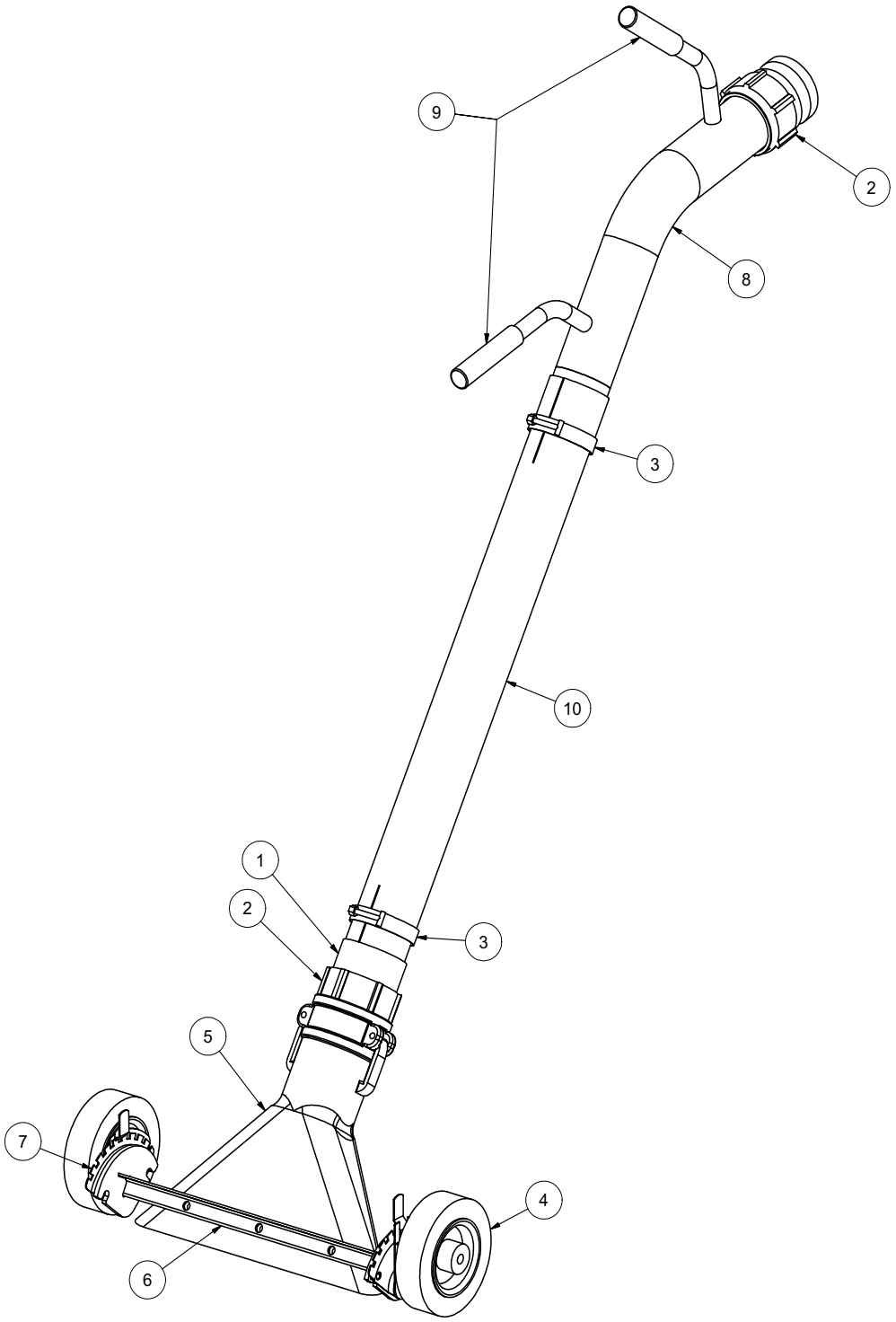

101512-E

VACASSY713

Tools

Lawn Sweeper 3”

ITEM	QTY	PART #	DESCRIPTION
	1	8043935	VAC TOOL LAWN SWEEPER COMPLETE
1	1	8030287	3" HOSE X 3" MNPT ADAPTER
2	2	8030391	BANJO 3" MALE 3" FNPT
3	2	8042605	CLAMP T-BOLT 3" (350)
4	2	8043887	WHEEL 6" PNEUMATIC
5	1	8043925	DUCKBILL 3" ALUMINUM
6	1	8043928	LS WHEEL WELDMENT
7	1	8043931	WHEEL ADJUSTERS (1 LEFT/1 RIGHT)
8	1	8043933	LS HANDLE WELDMENT
9	2	J300080	HANDLE GRIP
10	1	8043932	PVC 3” X 30”

Surface Cleaner

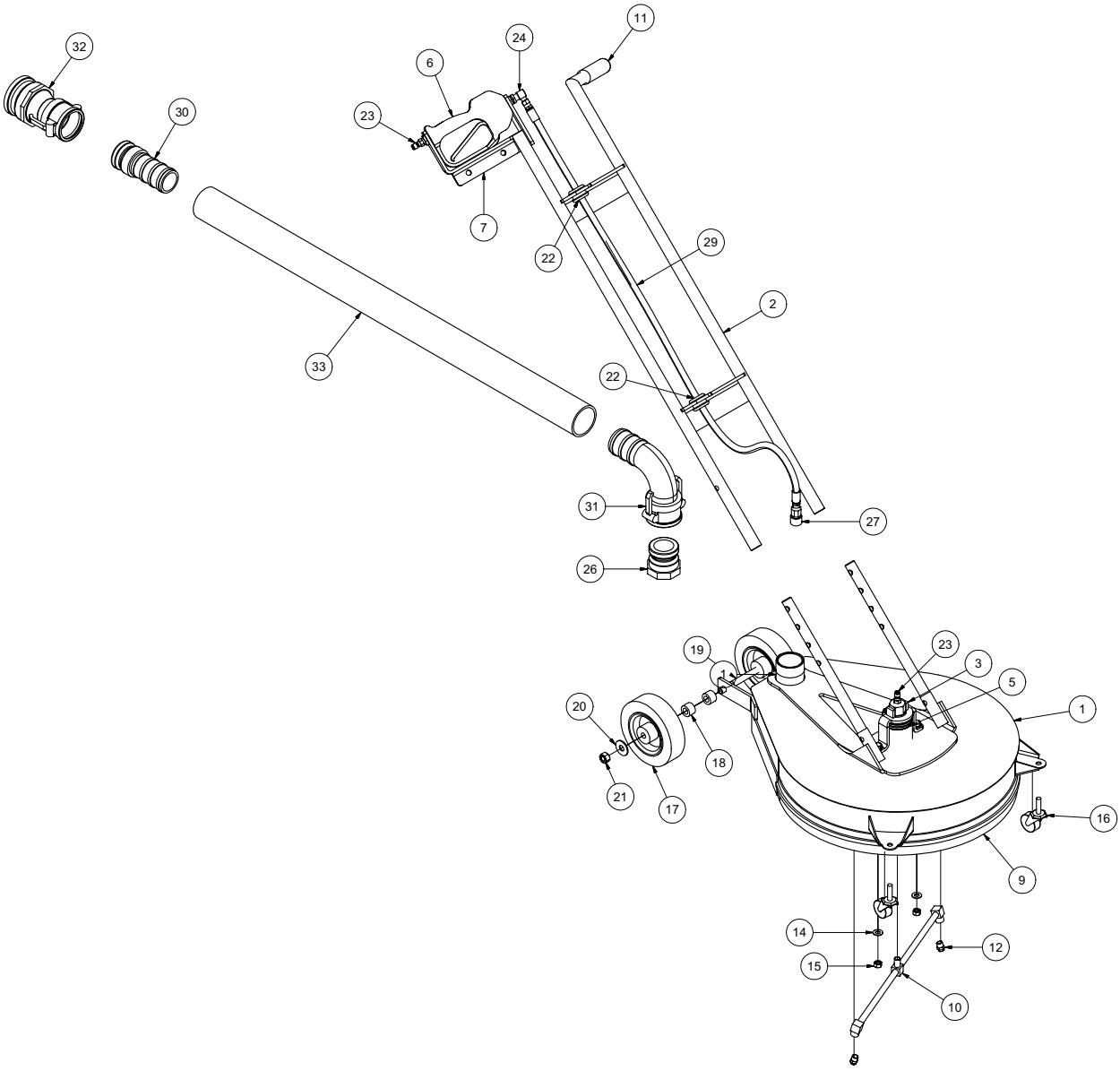

101512-E

VACASSY715

Surface Cleaner

ITEM	QTY	PART NO.	DESCRIPTION
	1	8043480	VAC TOOL SURFACE CLEANER COMPLETE
1	1	8041887	SURFACE CLEANER - HEAD ASSY
2	1	8042019	HANDLE ASSY
3	1	8041890	ROTARY RETAINER
4	2	8042022	HANDLE ADJ. TUBE
5	1	8042027	ROTARY HEAD
6	1	8042026	STRAIGHT SPRAY GUN
7	1	8042020	GUN CAPTURE BRACKET
8	1	8043467	SQUEEGEE
9	1	8042030	FLEXIBLE BRUSH
10	1	8042028	ROTARY ARM
11	1	J300080	GRIPHANDLE
12	2	8031419	NOZZLE, #4.0 25 DEG
13	2	U000420	SCREW, HC 3/8-16 X 1.00
14	4	U200600	WASHER, FLAT 3/8"
15	2	U100060	NUT, HEX 3/8-16
16	2	8043387	SWIVEL CASTER 1 5/8"
17	2	8043887	WHEEL 6" PNEUMATIC
18	2	8043591	SURFACE CLEANER REAR WHEEL SPACER
19	1	U001060	SCREW, HC 1/2-13 X 6.0
20	2	U200100	WASHER, FLAT 1/2"
21	1	U120120	NUT, LOCK 1/2-13
22	2	8041686	GROMMET 1"ID- 1 1/4"DOG-1/4"WO
23	2	8030486	WATER QD 1/4 MNPT SS
24	1	T401100	ELBOW 4MP 4MJ 90
25	1	T320030	FITTING, HOSE 4HO 4FJ
26	1	8043389	ADAPTER M2" F THREAD
27	1	8030526	FITTING, QD WATER 1/4"F-1/4"FP
28	1	T320300	FITTING, HOSE 4HO 4MP
29	1	8044108	HOSE VAC SURFACE CLEANER
30	1	8043392	ADAPTER M2" F THREAD
31	1	8043391	REDUCER COUPLER 2"F 90 DEG - 3"M
32	1	8043395	REDUCER COUPLER 2" X 3" ADAPTER
33	1	8043398	HOSE VAC CLEAR 2"
*	2	8043397	CLAMP VAC CLEAR HOSE 2"
*	4	U360020	PIN, U-LOCK 3/8 X 1.5

EXTENSION ARM BOOM

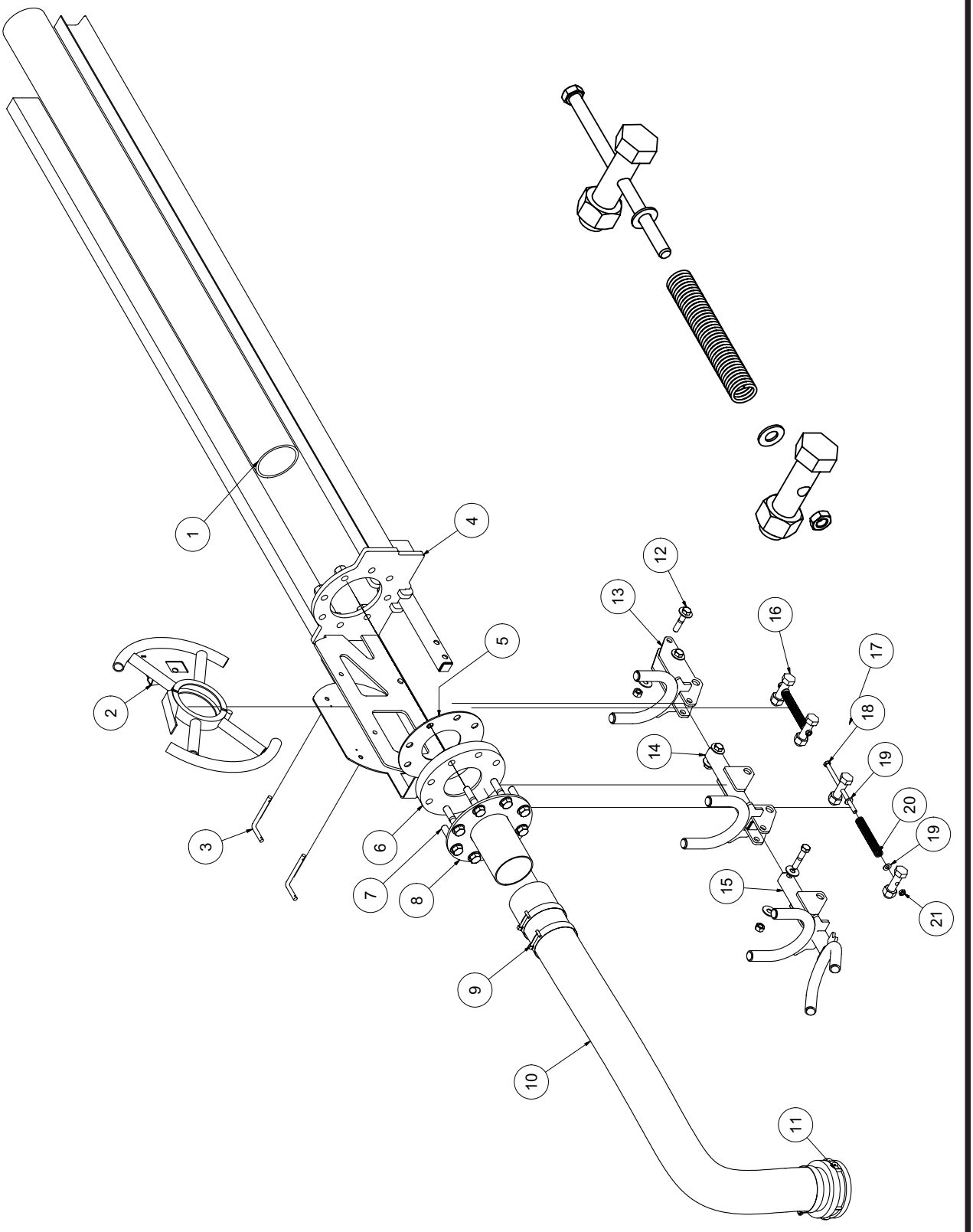

121310-E

VACASSY989

EXTENSION ARM BOOM

ITEM	QTY	NUMBER	DESCRIPTION
1	1	8042160	BOOM - PVC TUBE 4 X 60”
2	1	8043647	BOOM HANDLE WELDMENT
	2	8042971	RUBBER STRIP
3	2	8043947	CAPTURE PIN
	2	R700160	R-CLIP
	2	8041485	LANYARD CABLE
4	1	8046591	BOOM - EXTENSION ARM WELDMENT
5	1	8041938	GASKET, FLANGE 4”
6	1	8041937	4” PVC FLANGE
7	8	U001250	SCREW, HC 5/8” - 11 X 3.00”
	16	U200140	WASHER, FLAT 5/8”
	8	U120020	NUT, NYLOCK 5/8” - 11
8	1	8046638	BOOM - HOSE MOUNT PLATE WELDMENT
9	3	8042606	CLAMP, T-BOLT 4” (450)
10	1	8047019	HOSE VAC AG SUCTION 4-45”
11	1	8046444	CAMLOCK, 4” MCAM X MBARB
12	4	U000900	SCREW, 1/2” - 13 X 2 1/2” HHCS
	8	U200100	WASHER, FLAT 1/2”
	4	U120120	NUT, LOCK 1/2” - 13
13	1	8046612	BOOM - END PIVOT WELDMENT # 3
14	1	8046603	BOOM - END PIVOT WELDMENT # 1
15	1	8046606	BOOM - END PIVOT WELDMENT # 2
16	4	8046636	BOOM - SPRING BOLT
	4	U100200	NUT, HEX 3/4” - 10
17	1	8046771	SPRING, 3/8” - 5.00”, 480lb per in
18	2	U000635	SCREW, HC .375 - 16 X 6.50” ZP CR5
19	4	U200600	WASHER, FLAT 3/8”
20	1	8046770	SPRING, 3/8” X 5.00”, 395 lb per in
21	2	U120110	NUT, HEX LOCK

PIVOT ARM BOOM

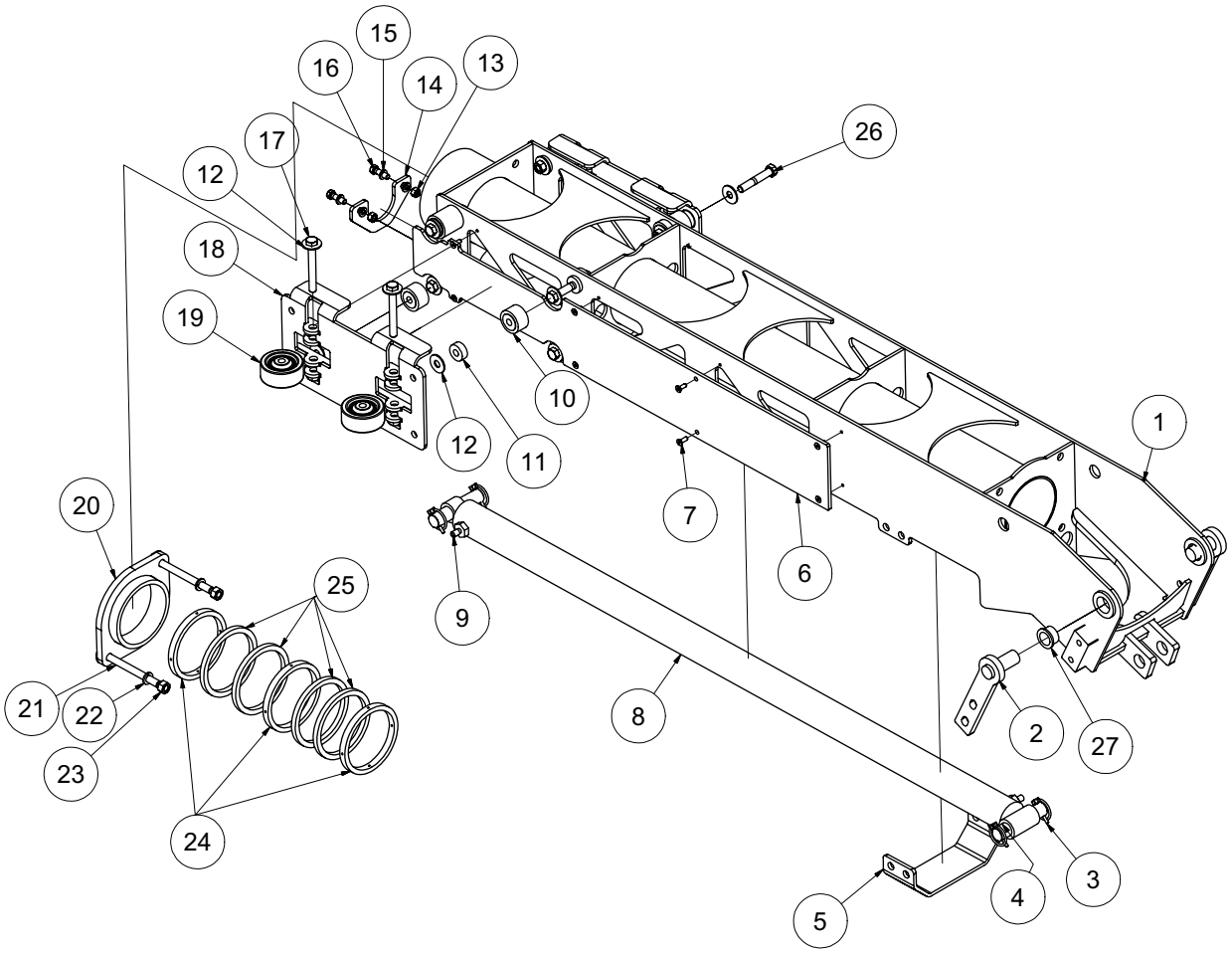

081910-E **VACASSY989**

PIVOT ARM BOOM

ITEM	QTY	NUMBER	DESCRIPTION
1	1	8046582	BOOM - PIVOT ARM WELDMENT
2	2	8046634	BOOM - PIVOT PIN WELDMENT
3	4	U340050	PIN LINCH 3/16" X 1 9/16"
4	2	8041990	BOM - PIVOT CYLINDER ROD PIN
5	1	8046635	BOOM - CRADEL FOOT PLATE
6	2	8041986	BOOM - PIVOT ARM GUIDE SHEET
7	16	U030015	SCREW, SFH 1/4-20 X .750
8	1	8041926	BOOM - CYLINDER WX
9	2	T400611	REDUCER, 1/2"MB - 1/4"MJ
10	4	W000055	CAM YOKE ROLLER 1 3/4"DIA X 1.00"
11	4	8046624	BOOM - CAM SPACER
12	14	U200100	WASHER, FLAT 1/2"
13	2	U100060	NUT, HEX 3/8"-16
14	1	8041956	BOOM - PIVOT ARM CYC RETAINER PLATE
15	4	U210060	WASHER, LOCK 3/8"
16	2	U000440	SCREW, HC 3/8"-16 X 1.25"
17	4	8046773	SCREW, BOOM EXT. CAPTURE PLATE
18	2	8046627	BOOM - EXT. CAPTURE PLATE WELDMENT
19	4	8030226	WHEEL 3.00"OD X 1.25" WIDE W / BRG
20	1	8041963	PACKING GLAND WELDMENT
21	2	U001020	SCREW, HC .50"-13 X 5.50"ZP GR5
22	2	U210111	WASHER, LOCK 1/2"
23	2	U100120	NUT, HEX 1/2-13
24	3	8041945	SLEEVE PLASTIC
25	4	8041947	PACKING RING
26	8	U000940	SCREW,HC .500-13X3.50
	16	U200110	WASHER, FLAT .500
	8	U120120	NUT, LOCK .500 - 13
27	2	8041883	BUSHING, BRONZE FLANGED 1"

TURRET

BOOM
MANUAL ROTATION
REV. FLOW

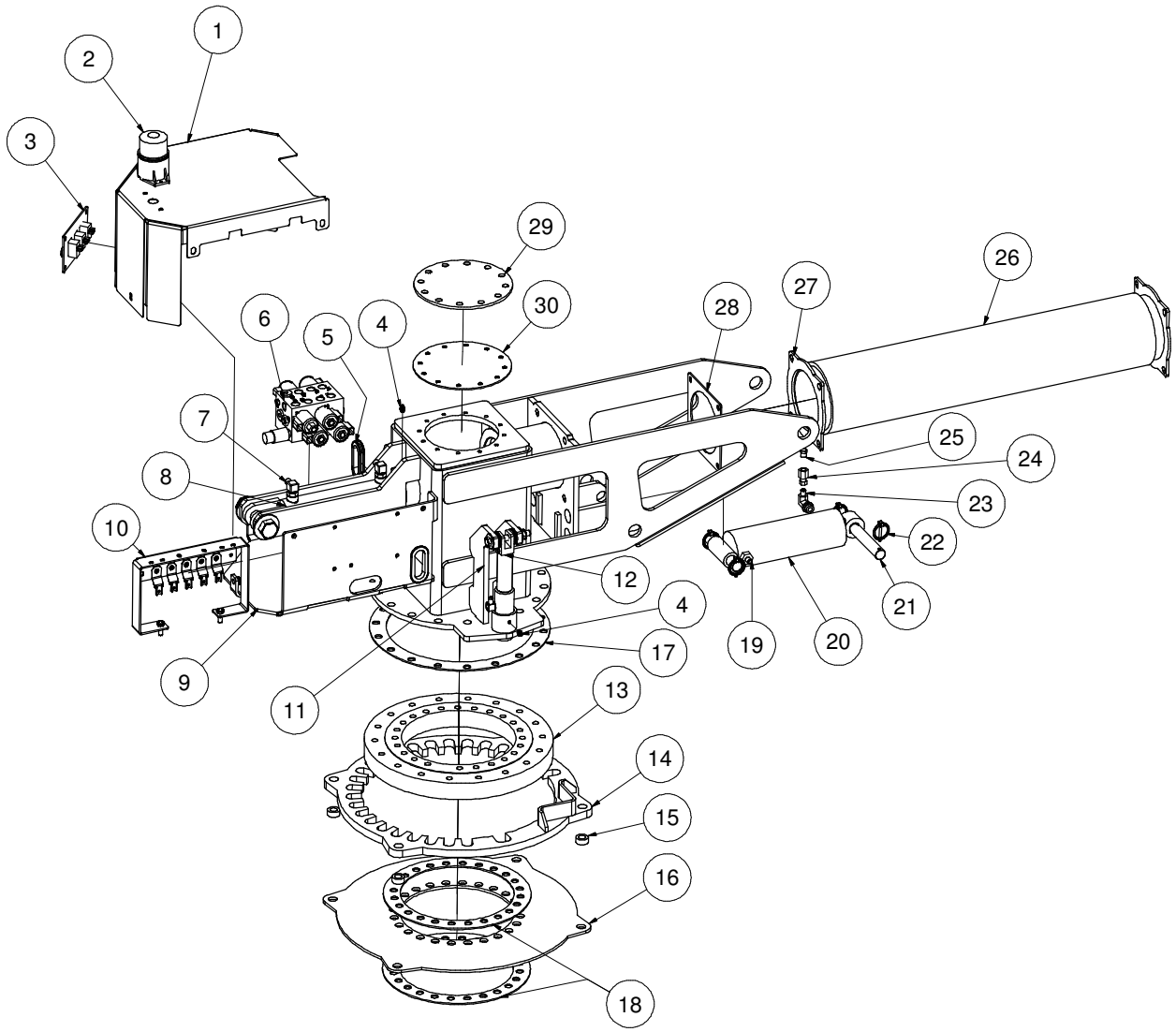

121212-E

VACASSY989-1

TURRET

BOOM MANUAL ROTATION REV. FLOW

ITEM	QTY	PART #	DESCRIPTION
1	1	8046644	BOOM - COVER WELDMENT
*	5	U000400	SCREW, HC 3/8”-16 X .75
*	5	U000440	WASHER, FLAT 3/8”
2	1	8043139	LIGHT STROBE LED DEUTSCH
3	1	8046696	PANEL CONTROL BOOM OVERRIDE
	1	X000274	SWITCH, ROCKER (UP / DOWN)
	1	X000274	SWITCH, ROCKER (EXTEND / RETRACT)
	1	X000273	SWITCH, ROCKER (BRAKE)
4	2	T500030	GREASE FITTING 1/8”NPT STRAIGHT
5	4	8042812	GROMMET 2”ID 3”OD 1/4”WOG TRAILER SLOT MODEL
6	1	8047331	MANIFOLD ASSY BOOM (CROSS2)
7	2	T401265	ELBOW, 90 1/2”MB - 1/4”MJ
8	1	8048198	BOOM GATE VALVE CYLINDER
	2	W201020	WIPER, CYLINDER ROD, 1 1/8” ROD
	1	8044480	SEAL PLATE WELDMENT
	1	8044482	BOOM SHUTOFF SEAL
	1	8044483	BOOM SHUTOFF SEAL PLATE SHIELD
	1	U001570	SCREW, HC 1”-8 X 5.00
	1	U120060	NUT, LOCK NY 1 - 8
9	1	8046571	BOOM TURRET WELDMENT
	6	U001281	SCREW, HC .625 - 11 X 3.50”
	6	U120020	NYLON LOCK NUT .625 - 11
	12	U200140	WASHER, FLAT .625
10	1	8046764	BOOM ELECTRICAL BRACKET LP
	5	X000320	DEUTSH DIODE RECEPTACLE
	1	8040185	RELAY
	2	8044912	TIME RELAY
11	1	8045157	BOOM MANUAL BRAKE WELDMENT
12	1	8043052	BRAKE, CYLINDER
	1	T401100	ELBOW, 4MP-4MJ, 90
13	1	8042234	SWIVEL BEARING
	3	T500020	FITTING, GREASE .125 STRAIGHT (2 IN INNER RING, 1 IN OUTER RING)
	18	U001195	SCREW, HC 5/8”-11 X 1 3/4”
	23	U001210	SCREW, HC 5/8”-11 X 2 1/4”
	41	U200140	WASHER, FLAT 5/8”
	41	U210140	WASHER, LOCK 5/8”
14	1	8046688	BOOM MOUNT BRAKE RING
	4	U001900	SCREW, HC 5/8”-11 X 2 1/2”
	8	U200140	WASHER, FLAT 5/8”
	4	U120140	NUT, LOCK 5/8”-11
15	4	8030315	SKID - WATER TANK CLEVIS TUBE
16	1	8046690	BOOM - LOWER STOP RING
17	1	8043780	GASKET BOOMBRG TOP
18	2	8043781	GASKET BOOMBRG BOT
19	1	T400611	UNION, 8MB - 4MJ
20	1	8046597	CYLINDER, HYD BOOM 3 X 6
21	2	8041977	BOOM - PIVOT CYLINDER BASE PIN
22	4	U340050	PIN LINCH 3/16 X 1 9/16”
23	1	T401265	ELBOW, 90 1/2”MB - 1/4”MJ
24	1	T400082	UNION, 1/4”FP - 1/4”FJ
25	1	T400801	FITTING, VENTED CAP 1/4” - 18NPTF
26	1	8042103	HOSE AG SUCTION 6 - 32 1/2”
	2	8042104	CLAMP, HOSE T-BOLT 6.75
27	2	8041958	BOOM - FLEX HOSE ADAPTER WELDMENT
28	2	8041988	BOOM - FLANGE GASKET
29	1	8044471	BOOM TURRET SHUTOFF - CLEAN COVER
30	1	8044475	BOOM TURRET SHUTOFF - CLEAN COVER GASKET

BOOM REMOTE CONTROL (US)
GENERATION C2 - KT - MANUAL

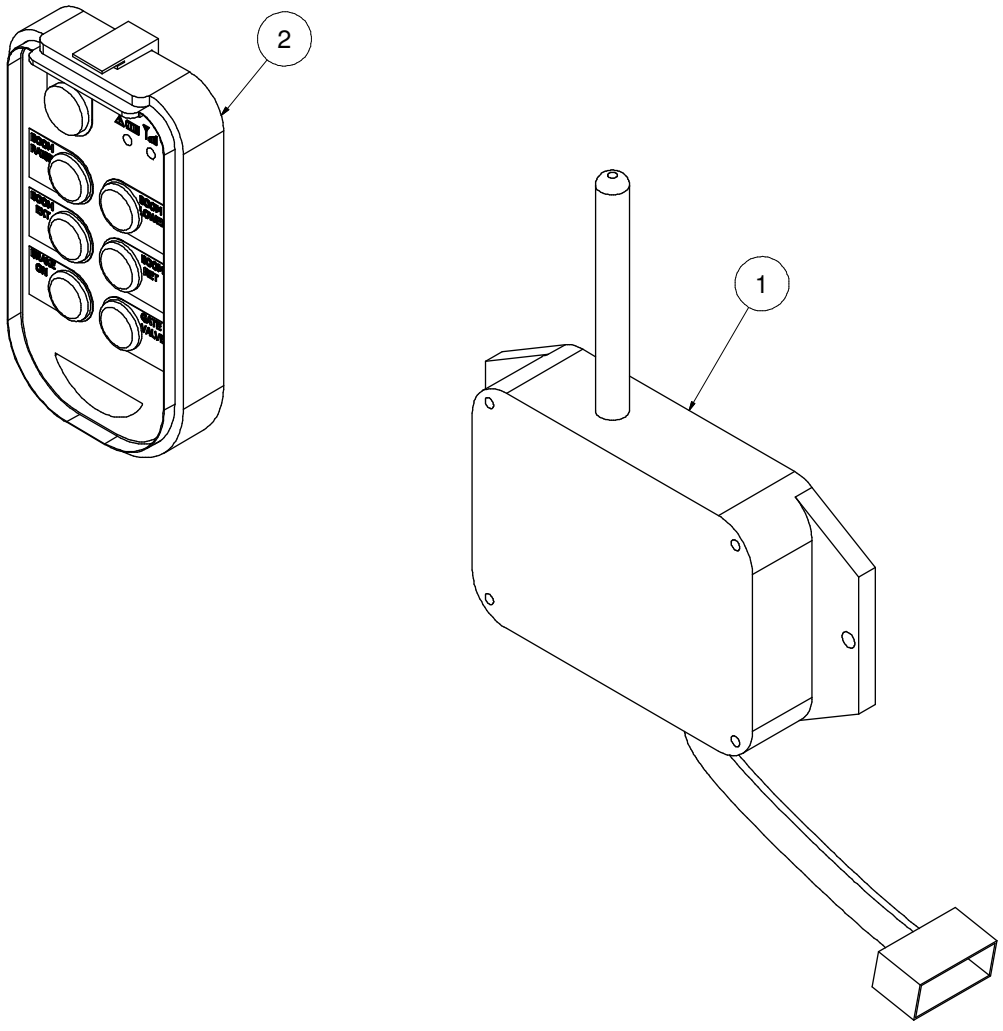

121812-E

VACASSY01502

BOOM REMOTE CONTROL (US)
GENERATION C2 - KT - MANUAL

ITEM	QTY	PART #	DESCRIPTION
1	1	8048310	BOOM - RC RECEIVER
2	1	8048300	REMOTE CONTROL BOOM MR ORG-US
*	1	X200060	HARNESS VAC BOOM UPPER
*	1	X200040	HARNESS VAC BOOM LOWER
*	1	8048777	SYSTEM OPERATION & TROUBLESHOOTING

121212-E **VACASSY01502**

BOOM REMOTE CONTROL (AUS)
GENERATION C2 - KT - MANUAL

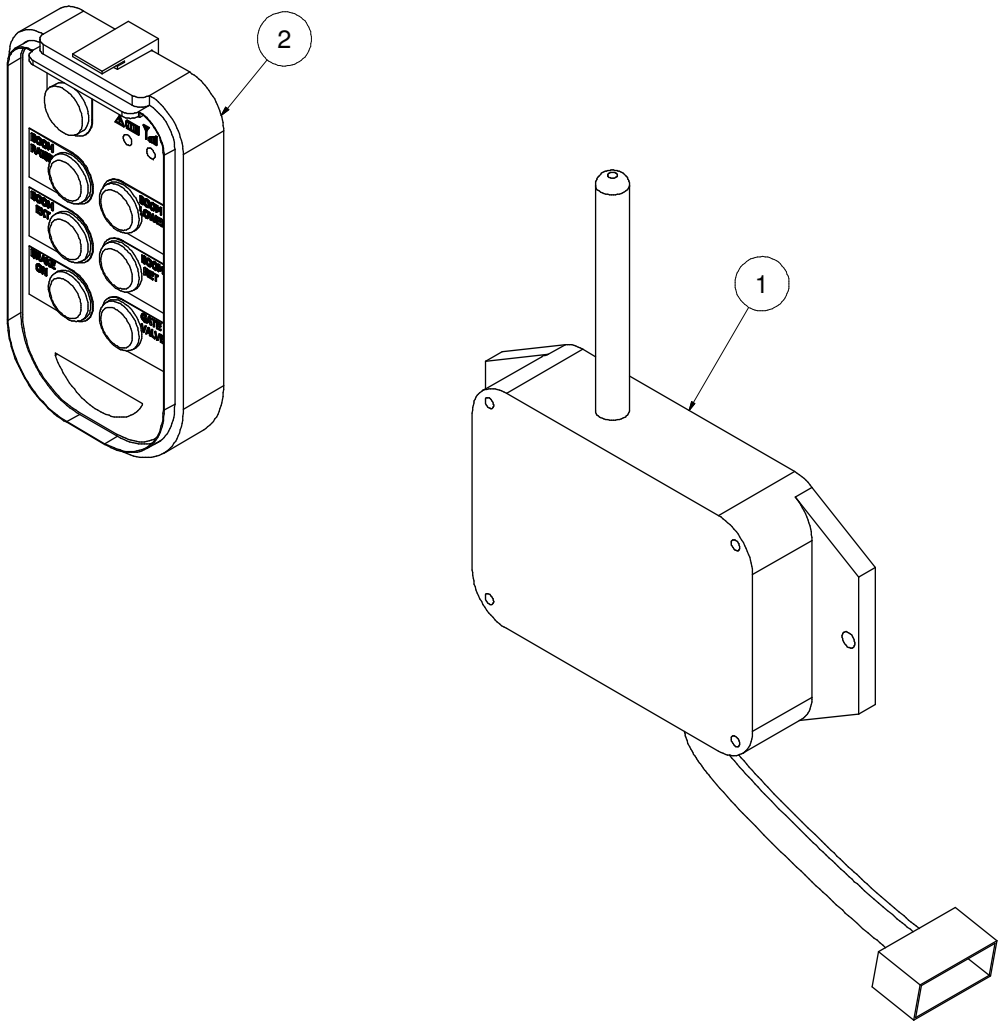

121212-E

VACASSY01503

BOOM REMOTE CONTROL (AUS) GENERATION C2 - KT - MANUAL

ITEM	QTY	PART #	DESCRIPTION
1	1	8048610	BOOM - RC RECEIVER
2	1	8048600	REMOTE CONTROL BOOM MR ORG-AUS
*	1	X200060	HARNESS VAC BOOM UPPER
*	1	X200040	HARNESS VAC BOOM LOWER
*	1	8048777	SYSTEM OPERATION & TROUBLESHOOTING

121212-E **VACASSY01503**

BOOM REMOTE CONTROL
GENERATION C2 - TR - MANUAL

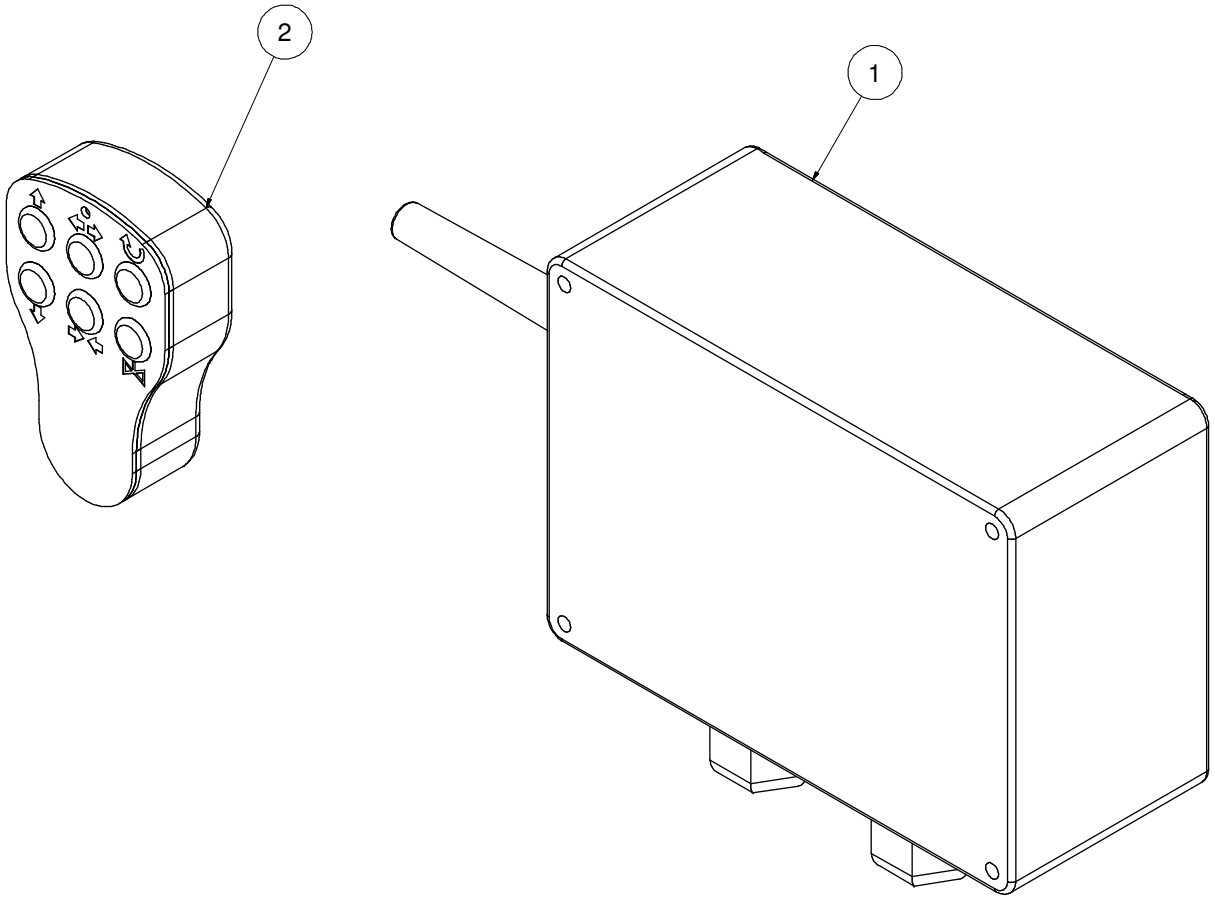

121212-E

VACASSY01500

BOOM REMOTE CONTROL GENERATION C2 - TR - MANUAL

ITEM	QTY	PART #	DESCRIPTION
1	1	8041915	BOOM - RC RECEIVER 8-RELAY
	1	8044994	ANTENNA, BOOM 7" 90DEG.
2	1	8042426	RC TRANSMITTER (W / GRAPHIC OVERLAYS)
*	1	8045653	BOOM REMOTE METAL CLIP
*	1	X200028	HARNESS VAC BOOM UPPER
*	1	8041911-1	RUBBER 6-BUTTON PAD
*	1	8043075	DECAL OVERLAY
*	1	8042428	RC TRANSMITTER 8 BUTTON
*	1	X200040	HARNESS VAC BOOM LOWER
*	1	VSB056	PROGRAM INSRUCTIONS

121212-E **VACASSY01500**

HOSE STORAGE BOOM

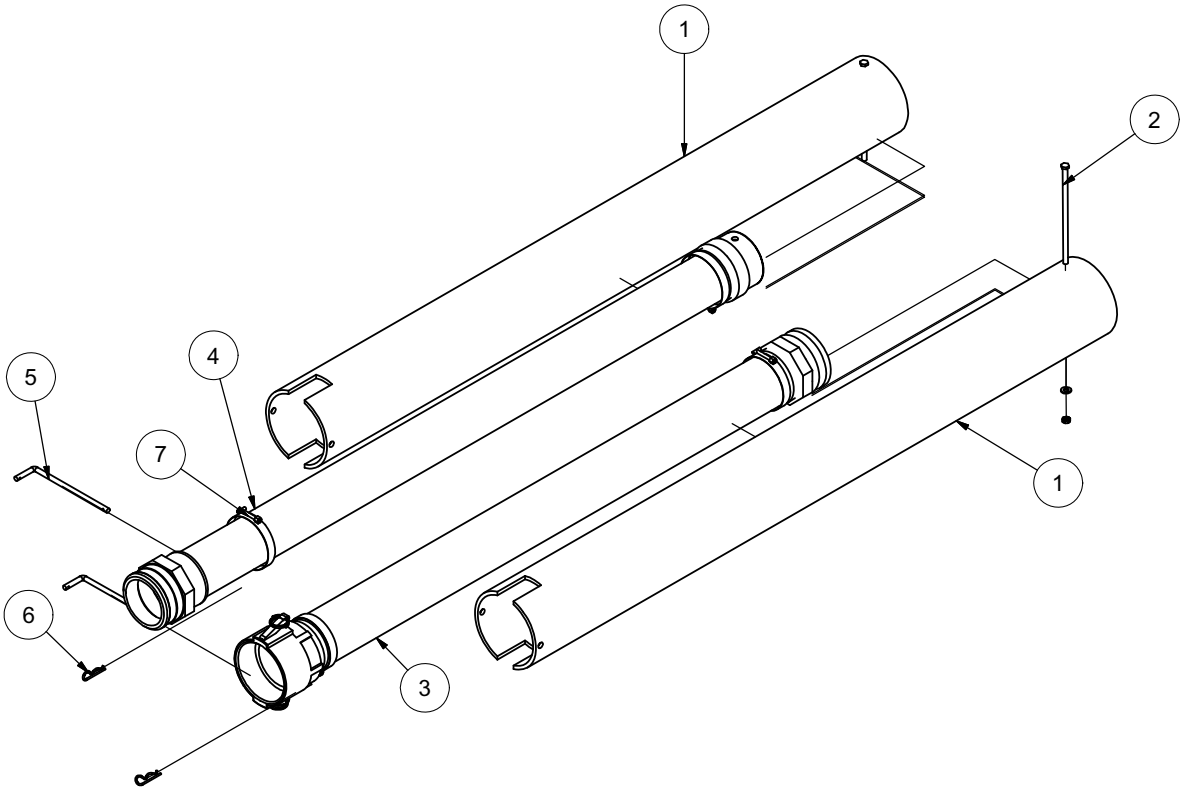

060311-E **VACASSY978**

HOSE STORAGE BOOM

ITEM	QTY	NUMBER	DESCRIPTION
1	2	8042222	BOOM EXTENSION HOSE STORAGE
	2	8043198	CLAMP T-BOLT 700
2	2	U000626	SCREW, HC 3/8"-16 X 7.50"
	1	U200060	WASHER, FLAT 3/8"
	1	U120110	NUT, LOCK .375-16
3	1	8042137	BOOM HOSE EXTENSION
	1	8041781	BOOM EXTENSION HOSE
	2	8045239	UNION EXHAUST 4"OD - MNPT
	1	8030846	4" FEMALE COUPLER
	1	8030844	4" MAL COUPLER
4	1	8032138	BOOM HOSE EXTENSION WITH 4" UNION PVC
	1	8045723	4" ALUMINUM TUBE 52 1/2"LG
	2	8045728	4" HALF NIPPLE
	1	8030844	COUPLING, 4" ALUM CAMLOCK MXF
	1	8045725	UNION PVC 4"FNPT 4"MSLIP w/HOLE
5	2	8041101	HOSE STORAGE RETAINING ROD
	2	8041485	LANYARD CABLE
6	2	R700160	R-CLIP
7	4	8042606	CLAMP T-BOLT 450

060311-E **VACASSY978**

Hot Box Assembly

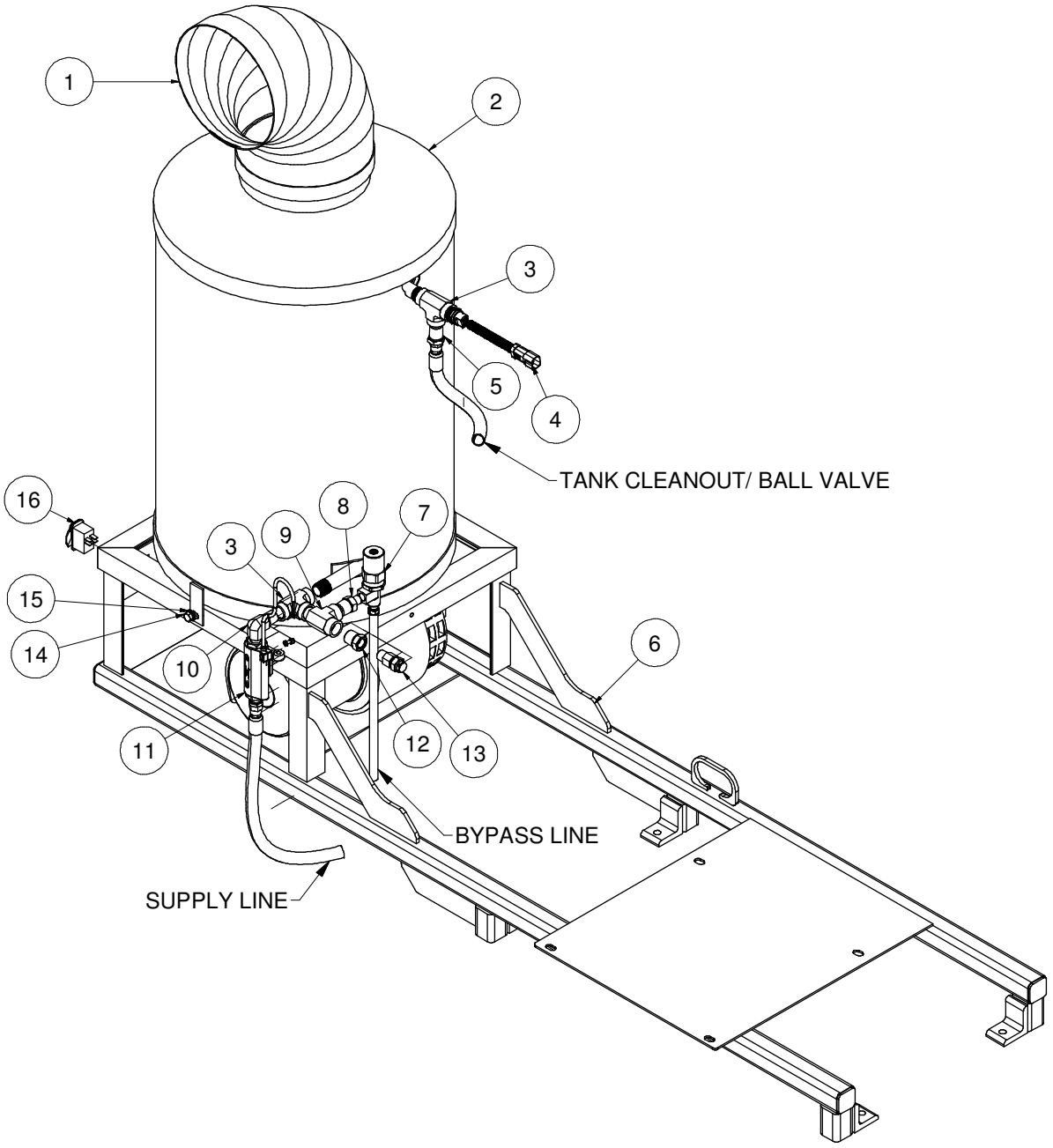

011413-E

VACASSY988

Hot Box Assembly

ITEM	QTY	NUMBER	DESCRIPTION
1	1	8046535	8” ELBOW EXHAUST (AQUA-BLAST)
2	1	8046448	HOT BOX, VERTICAL
3	2	T402130	ADAPTER, TEE 8FP - 8FP - 8FP GALV
4	1	8048033	TEMPERTURE SWITCH .50NPTM 100 & 165 DEG
5	1	8031291	ADAPTER STR. 8MP - 6MJ GALV.
6	1	8046664	AIR FILTER HOT BOX BRACKET LE
7	1	8048030	VALVE PRESSURE REGULATING 5075PSI 8GPM
8	1	T400123	FITTING, 1/2”MP - 1/4”MP
9	1	T402156	ADAPTER, TEE 8MP - 8MP - 8FP GALV
10	1	T401136	ELBOW, 90 8MP - 6MP
11	1	8047724	SWITCH, FLOW 3/8FP, GRAVITY ACTUATED
12	1	T400024	ADAPTER STR. 8MP - 6FP
13	1	8046976	VALVE PRESSURE RELIEF BURST DISK 5000PSI
14	3	U200020	SCREW, HC 5/16” - 18 X 1.00
15	3	U200040	WASHER, FLAT 5/16”
16	1	X000271	SWITCH, HIGH/LOW
*	1	J200062	DECAL HOT BOX TEMP HI-LO
*	1	X200047	HARNESS HOT BOX SWITCH SIDE
*	1	X200048	HARNESS HOT BOX POWER SIDE

* ITEM NOT SHOWN

Hose Reel Assembly (Jetter)

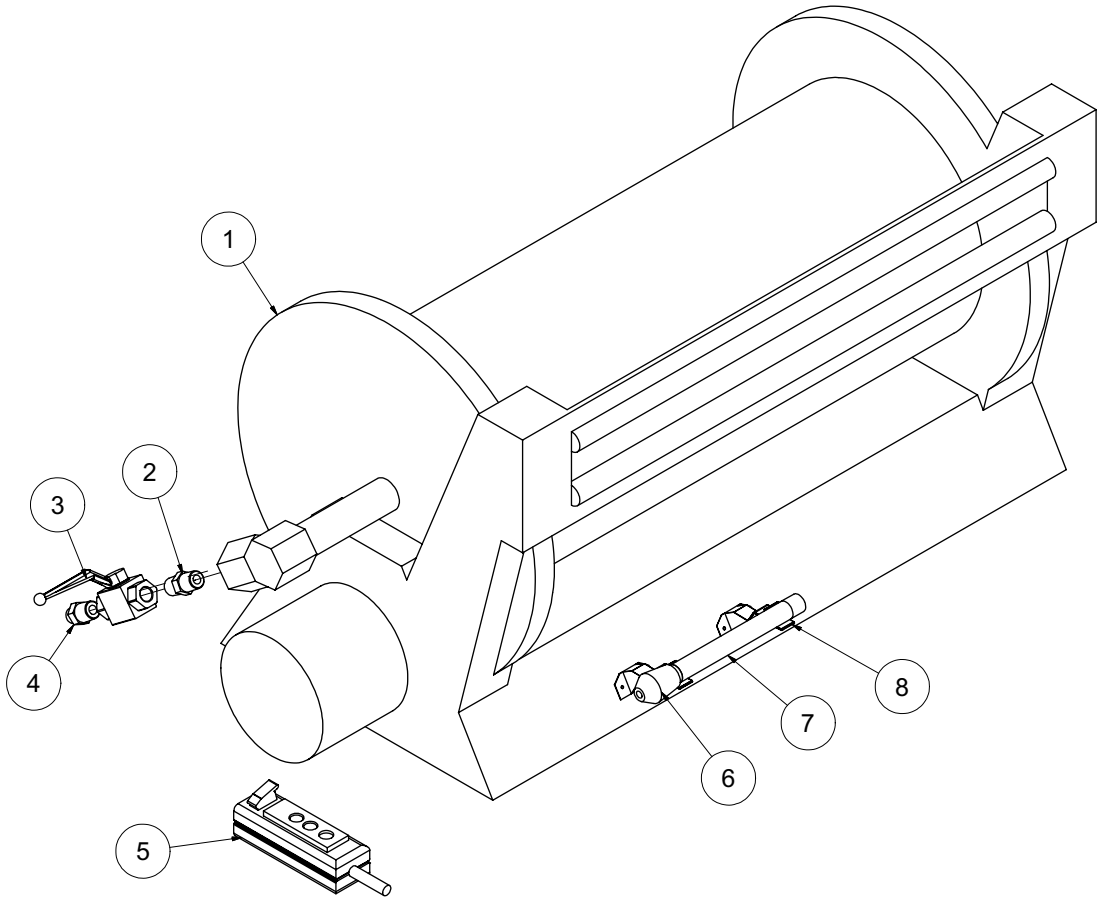

081610-E

VACASSY766

Hose Reel Assembly (Jetter)

ITEM	QTY	NUMBER	DESCRIPTION
1	1	8043214	REEL ONLY JETTER 1/2" X 500'
2	1	T404020	UNION, 8MP - 8MP
3	1	8031197	STEEL BALL VALVE - 1/2”NPT
4	1	T400040	UNION, 8MP - 8MJ
5	1	8030859	HANDSET CONTROLLER (JETTER)
6	1	8040546	JETTER NOZZLE 12GPM
7	1	8032013	NIPPLE, STAINLESS 1/2”MP X 8”
8	1	8040899	CLIP, TOOL HOLDER

081610-E

VACASSY766

Hose Reel (Jetter) Components

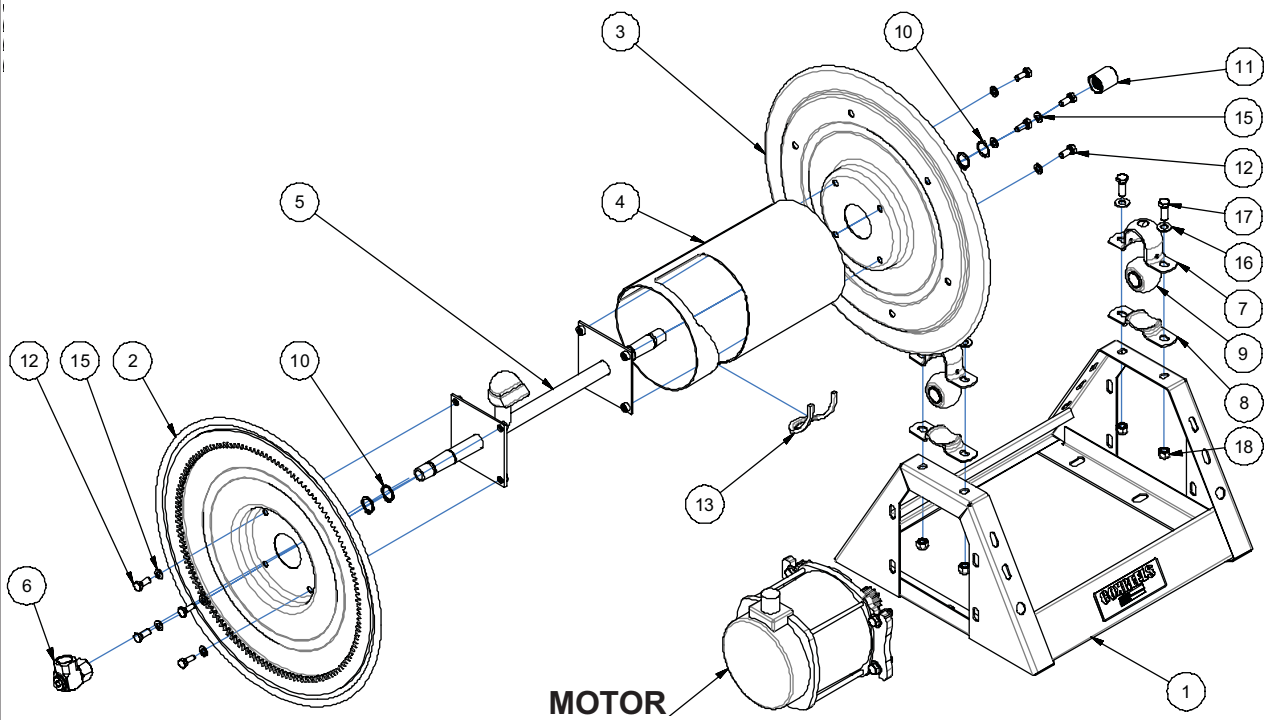

MOTOR ASSEMBLY

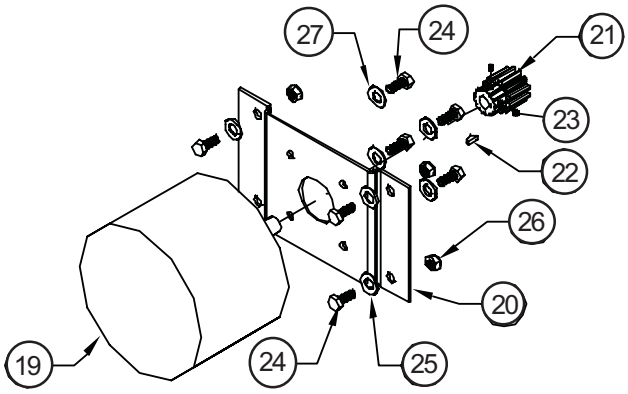

081010-E

VACASSY765

Hose Reel Components

ITEM	QTY	NUMBER	DESCRIPTION
		8043214	REEL ONLY JETTER 1/2" X 500'
1	1	8043214-1	REEL, JETTER FRAME
2	1	8043214-2	DISC, SWV SIDE
3	1	8043214-3	DISC, CRK SIDE
4	1	8043214-4	CENTER DRUM
5	1	8043214-5	AXLE ASSEMBLY
6	1	8043214-6	SWIVEL
7	2	8043214-7	PILLOW BLOCK, MTG, TOP
8	2	8043214-8	PILLOW BLOCK, MTG, BOTTOM
9	2	8043214-9	BEARING
10	4	8043214-10	R. RING
11	1	8043214-11	ASSY, LOCK PIN
12	10	8043214-12	BOLT, 5/16” - 18 X 3/4”LG
13	1	8043214-13	TRIM
15	8	8043214-15	WASHER, LOCK 5/16”
16	4	8043214-16	WASHER, FLAT 3/8”
17	4	8043214-17	BOLT, 3/8”-16 X 1”LG
18	4	8043214-18	NUT, LOCKING 3/8”
19	1	8043214-19	MOTOR, 12VDC
20	1	8043214-20	BRACKET, 12VDC MOTOR
21	1	8043214-21	PINION GEAR
22	1	8043214-22	KEY
23	2	8043214-23	SCREW, SET
24	8	8043214-24	BOLT, 5/16” - 18 X 3/4”
25	4	8043214-25	WASHER, FLAT 5/16”
26	4	8043214-26	NUT, LOCKING 5/16 - 18
27	4	8043214-27	WASHER, LOCK 5/16”

081010-E

VACASSY765

Arrow Board Option

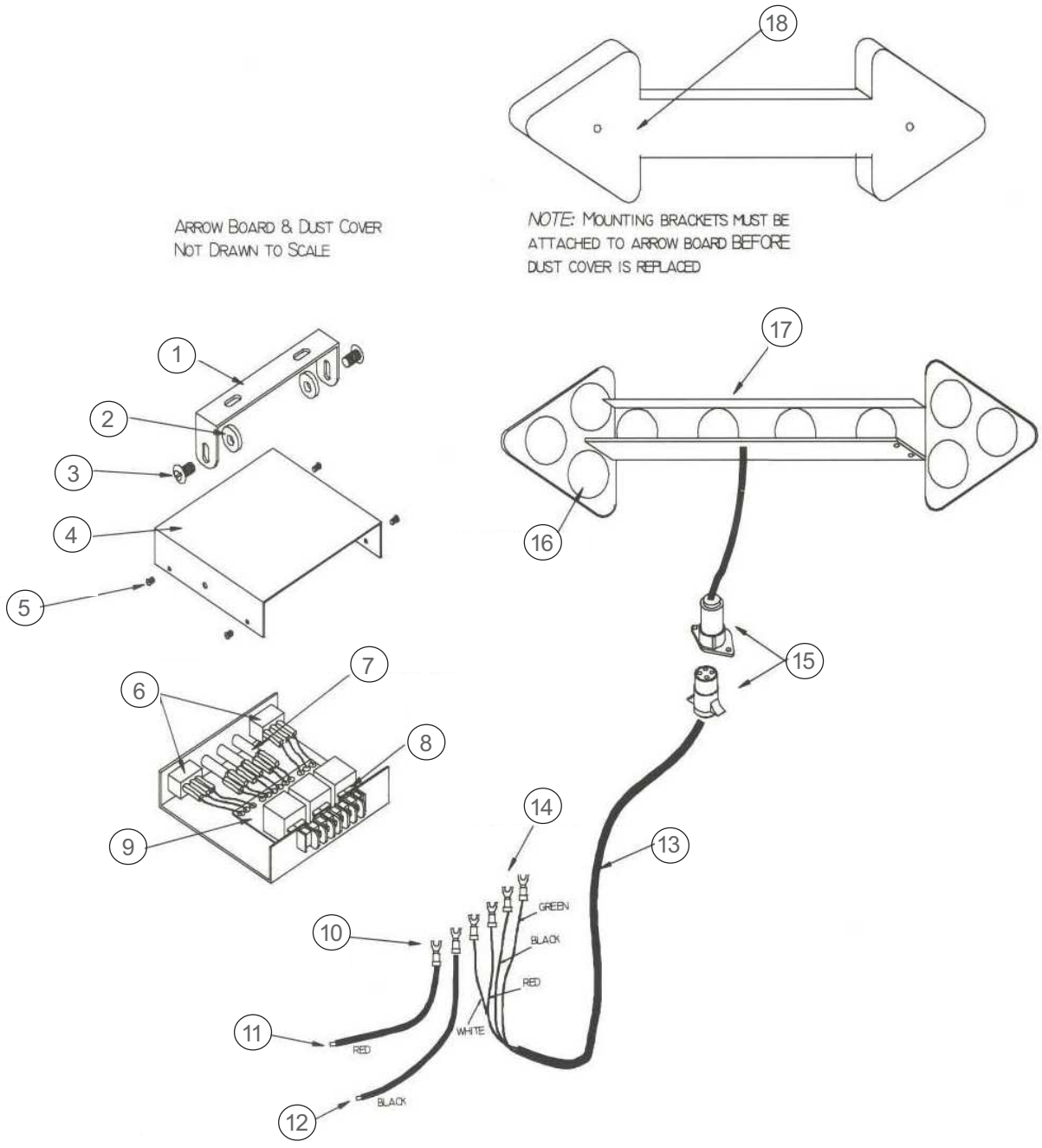

111110-E

VACASSY947

Arrow Board Option

ITEM	QTY	PART #	DESCRIPTION
1	1	8042197-1	MOUNTING BAIL
2	2	8042197-2	WASHER
3	2	8042197-3	BOLT
4	1	8042197-4	COVER
5	4	8042197-5	MACHINE SCREW
6	2	8042197-6	SPDT SWITCH
7	3	8042197-7	RED PILOT LAMP
8	1	8042197-8	15 AMP FUSE
9	1	8042197-9	CIRCUIT BOARD ASSY
10	2	8042197-10	#6 BLUE SPADE CONNECTOR
11	4’	8042197-11	RED
12	4’	8042197-12	BLACK
13	20’	8042197-13	CABLE HARNESS
14	4	8042197-14	#6 BLUE SPADE CONNECTOR
15	1	8042197-15	4-WAY CONNECTOR
16	1	8042197-16	STANDARD LAMP ASSY
17	1	8042197-17	ARROWBOARD FRAME
18	1	8042197-18	DUST COVER
*	1	8045830	ARROWBOARD BRACKET
*	1	8046526	ARROWBOARD MOUNT PLATE

111110-E

VACASSY947

Aux.Hydraulics (Boom)

67HP/99HP

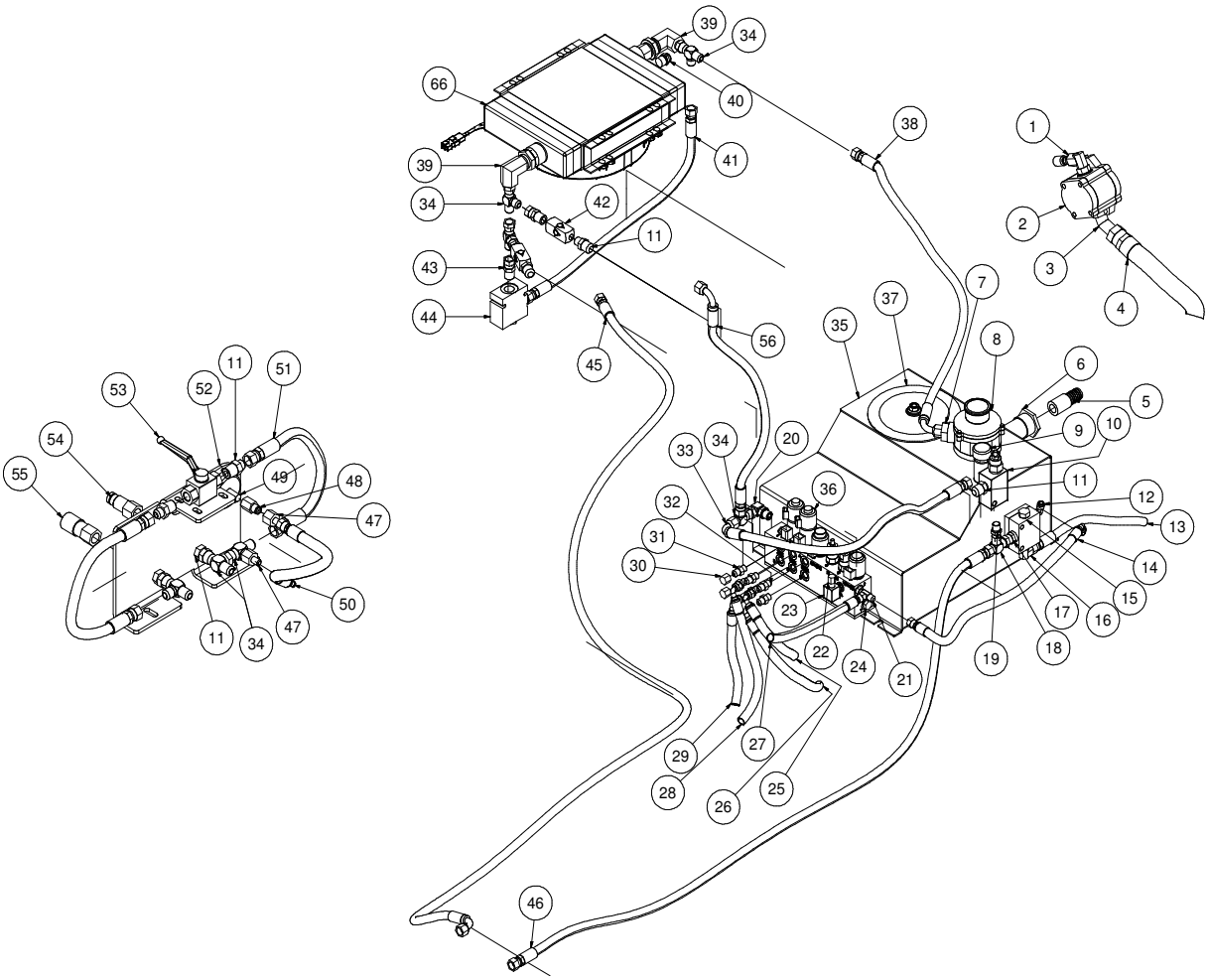

052412-E

VACASSY993

Aux.Hydraulics (Boom)

67HP/99HP

ITEM	QTY	PART	DESCRIPTION
1	1	T401290	ELBOW, 90 5/8”MP - 3/8”MJ
2	1	8047333	PUMP, HYD. BOOM 67/99 HP
3	1	8043964	ELBOW, 45 16HB - 12MB
4	1	8047786	HOSE VAC SUCTION 1” - 52”LG; PUMP TO SUCTION STRAINER
5	1	8043963	UNION, 1”MP - 1”BARB
6	1	8011058	SUCTION STRAINER 1” / 15GPM
7	1	T400240	REDUCER, 1”MB - 1/2”MJ
8	1	8047456	FILTER, HYD. OIL AUX. HYD.
	1	8047456-1	PRESSURE INDICATOR
9	1	8047330-14	CAP, HYD. TANK
10	1	8041829	VALVE RELIEF
11	5	T400040	UNION, 1/2”MP - 1/2”MJ
12	1	8030498	ELBOW, 3/8”MP - 3/8”MJ, 90
13	1	8042924	HOSE ASSY VAC 6-60” ST-ST; PUMP TO PRIORITY VALVE
14	1	8042006	HOSE ASSY VAC 6-28” ST-90; 2GPM PRIORITY TO MANIFOLD
15	1	3000084	VALVE, PRIORITY 2.0 GPM
16	1	T401120	ELBOW, 90 3/8MP - 1/2”MJ
17	1	T401125	REDUCER, 3/8”MP - 1/2”FJ
18	1	T402040	TEE, 1/2”MJ - 1/2”MJ - 1/2”MJ
19	4	T400814	UNION, 1/2”MP - 1/2”FJ
20	1	T401250	ELBOW, 90 3/8”MB - 3/8”MJ
21	1	T402148	TEE, 6MB - 6MJ - 6MJ
22	1	T405200	CAP, 1/4” FEM. JIC., HEX HEAD
23	1	T401230	ELBOW, 90 1/4”MB - 1/4”MJ
24	1	T405064	PLUG, 3/8”NPT
25	1	8047787	HOSE ASSY VAC 4-133” ST-90; TO TEE(DOOR CYL. BASE END)
26	1	8047787	HOSE ASSY VAC 4-133” ST-90; TO TEE (DOOR CYL. ROD END)
27	1	8047788	HOSE ASSY VAC 6-200” ST-ST; HOSE TO BOOM
28	1	8043782	HOSE ASSY VAC 6-77” ST-90; TO TEE (TANK CYL. BASE END)
29	1	8043782	HOSE ASSY VAC 6-77” ST-90; TO TEE (TANK CYL. ROD END)
30	2	T405203	CAP, 3/8” FEM. JIC, HEX HEAD
31	4	T400037	UNION, 6MB - 6MJ
32	2	T400550	REDUCER, 3/8”MB - 1/4”MJ
33	1	8043847	HOSE ASSY VAC 6-34” ST-90; PRESSURE RELIEF DRAIN LINE
34	7	T402155	TEE, 1/2”FJ - 1/2”MJ - 1/2”MJ
35	1	8047388	TANK, HYD. AUX. (CROSS2)
36	1	8047330-02	BASE MANIFOLD
37	1	8047330-15	CLEANOUT COVER
38	1	8048117	HOSE ASSY VAC 8-48” ST-90; COOLER TO FAN RETURN LINE
39	2	T401320	ELBOW, 90 3/4”MB(ADJ) - 1/2”MJ
40	1	8047920	SWITCH, TEMP. 165DEG F
41	1	8041492	HOSE ASSY VAC 8-18” ST-90; PRESSURE SPIKE BYPASS LINE
42	2	T000312	VALVE, CHECK 1/2”NPT
43	1	T400814	UNION, 1/2”MP - 1/2”FJ
44	1	8047321	VALVE, CARTRIDGE CHECK 65PSI
	1	8047322	VALVE, BODY ALUM.
45	1	8046706	HOSE ASST VAC 8-126” ST-90; AUX. RETURN LINE
46	1	8041869	HOSE ASSY VAC 8-100” ST-90; AUX. PRESSURE RETURN LINE
47	2	T400705	REDUCER, 8FJ - 6MJ

052412-E

VACASSY993

Aux.Hydraulics (Boom)

67HP/99HP

ITEM	QTY	PART	DESCRIPTION
48	1	8031126	REDUCER, 1/4”FP - 3/8”MJ
49	1	HM00092	GAUGE, PRESSURE 3000PSI
50	1	8043846	HOSE ASSY VAC 6-10” ST-90; HOSE TO GAUGE
51	2	8044647	HOSE ASSY VAC 8-14” ST-ST; BALL VALVE TO PRESSURE/RETURN LINE
52	1	8041149	AUX. HYD. CONSOLE, MTG PLATE
53	1	8031197	BALL VALVE, 1/2”NPT
54	1	8030662	FITTING, QUICK DISCONNECT MALE
55	1	8030663	FITTING, QUICK DISCONNECT FEMALE
56	1	8048118	HOSE ASSY VAC 8-36” ST-90; MANIFOLD TO COOLER RETURN LINE
57	1	T405064	PLUG, 3/8”NPT

052412-E

VACASSY993

Vacuum Diesel Engine Schematic

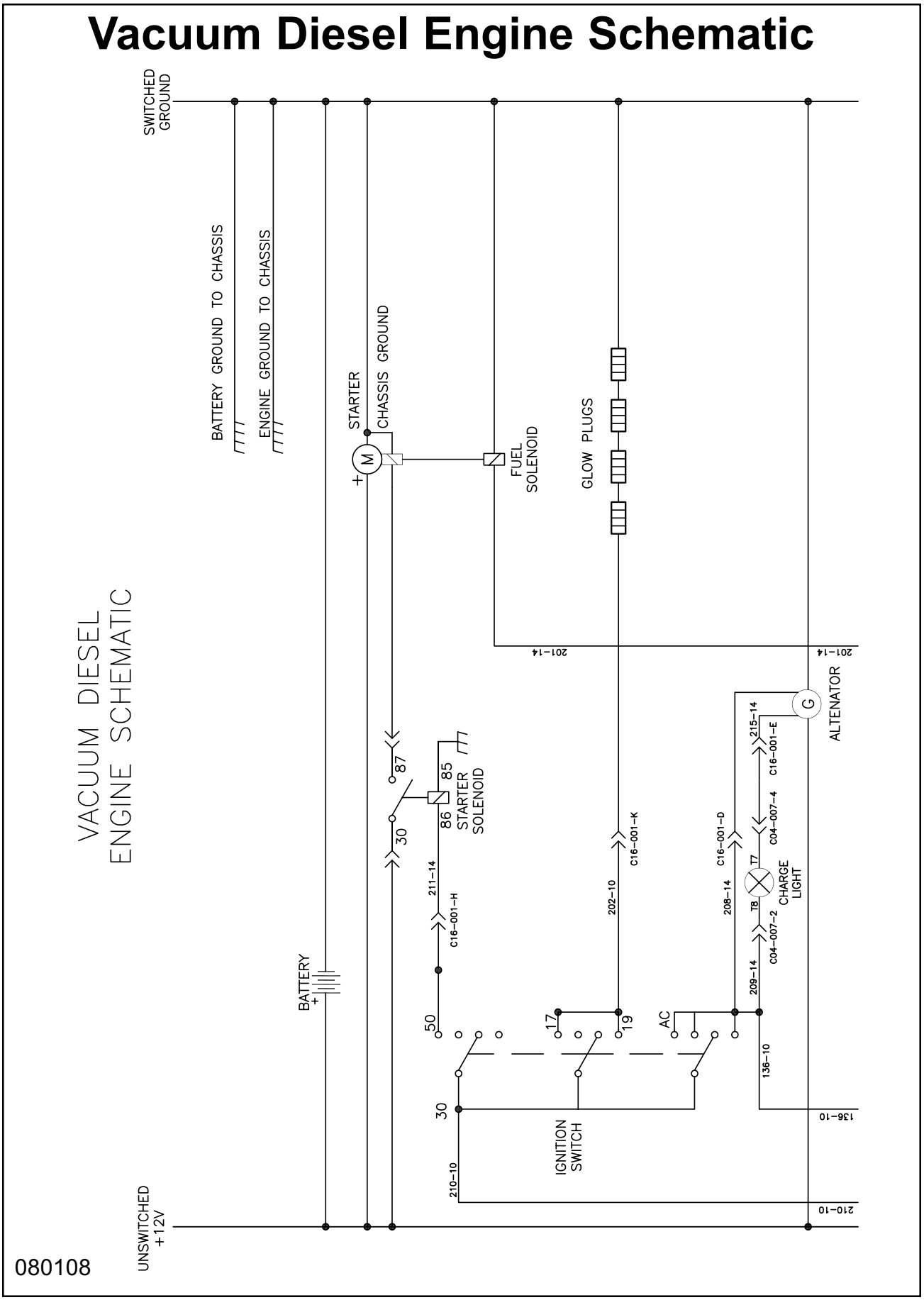

080108

Vacuum Diesel Engine Schematic

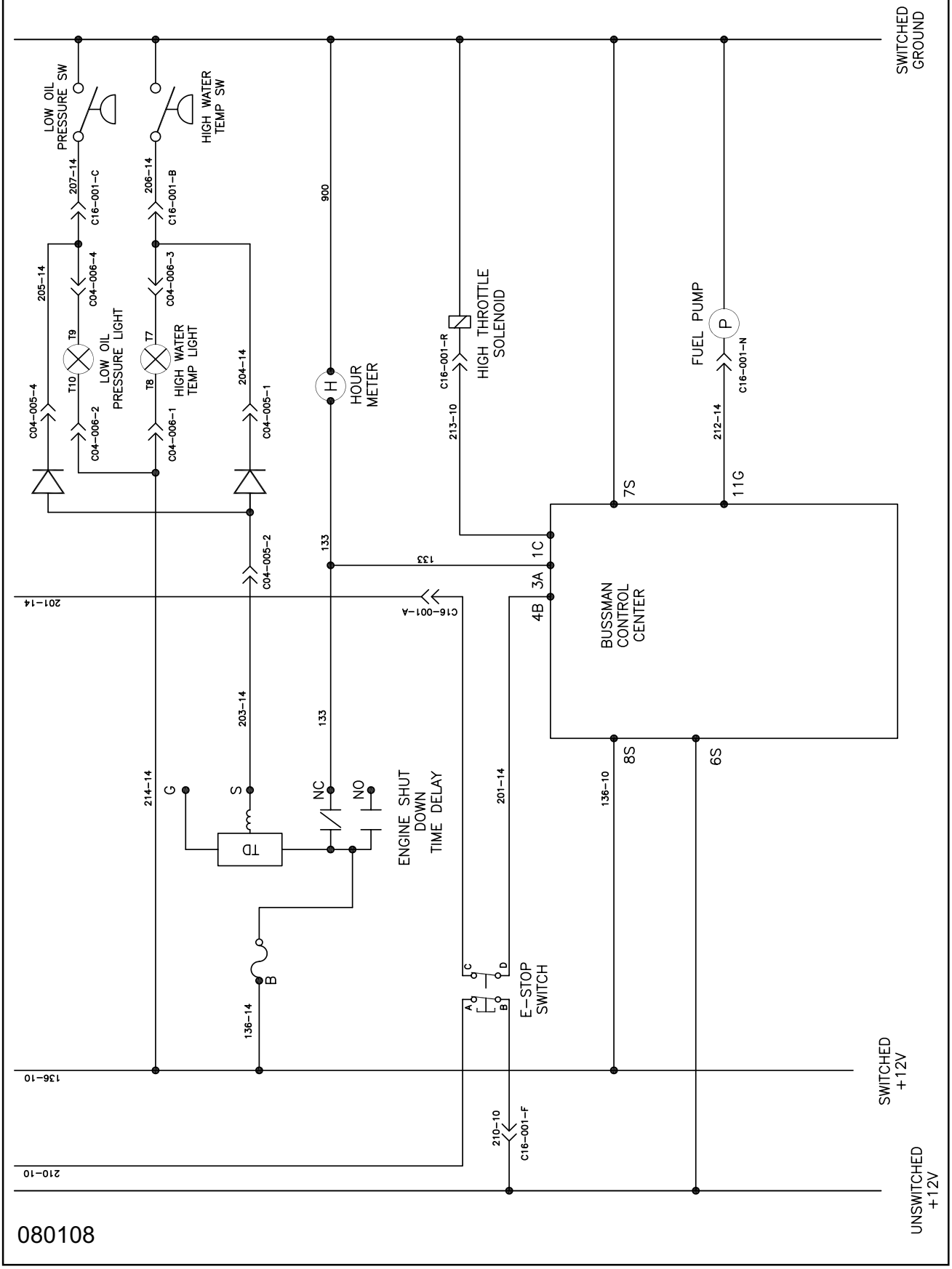

080108

Vacuum Diesel Engine Schematic

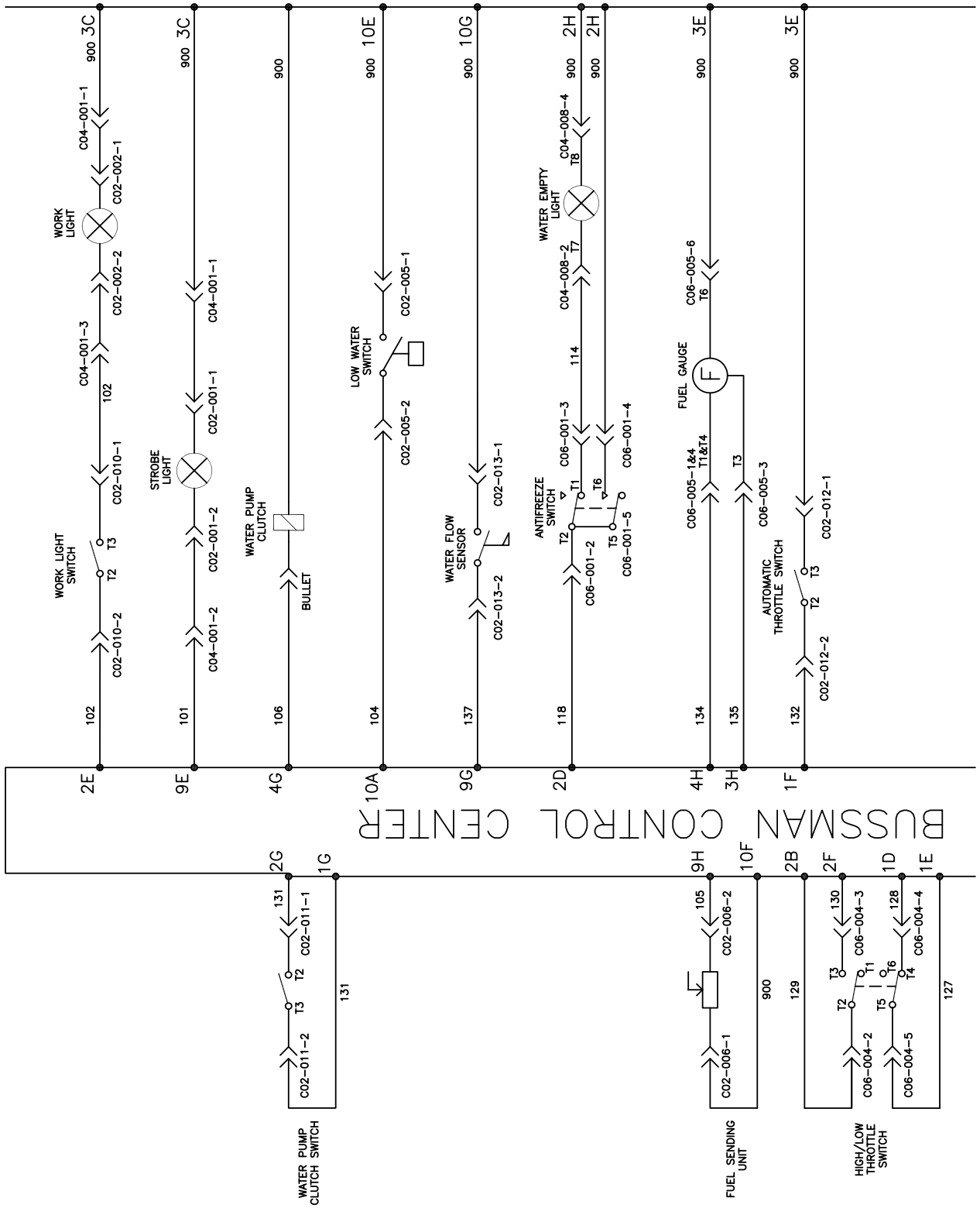

080108

Vacuum Diesel Engine Schematic

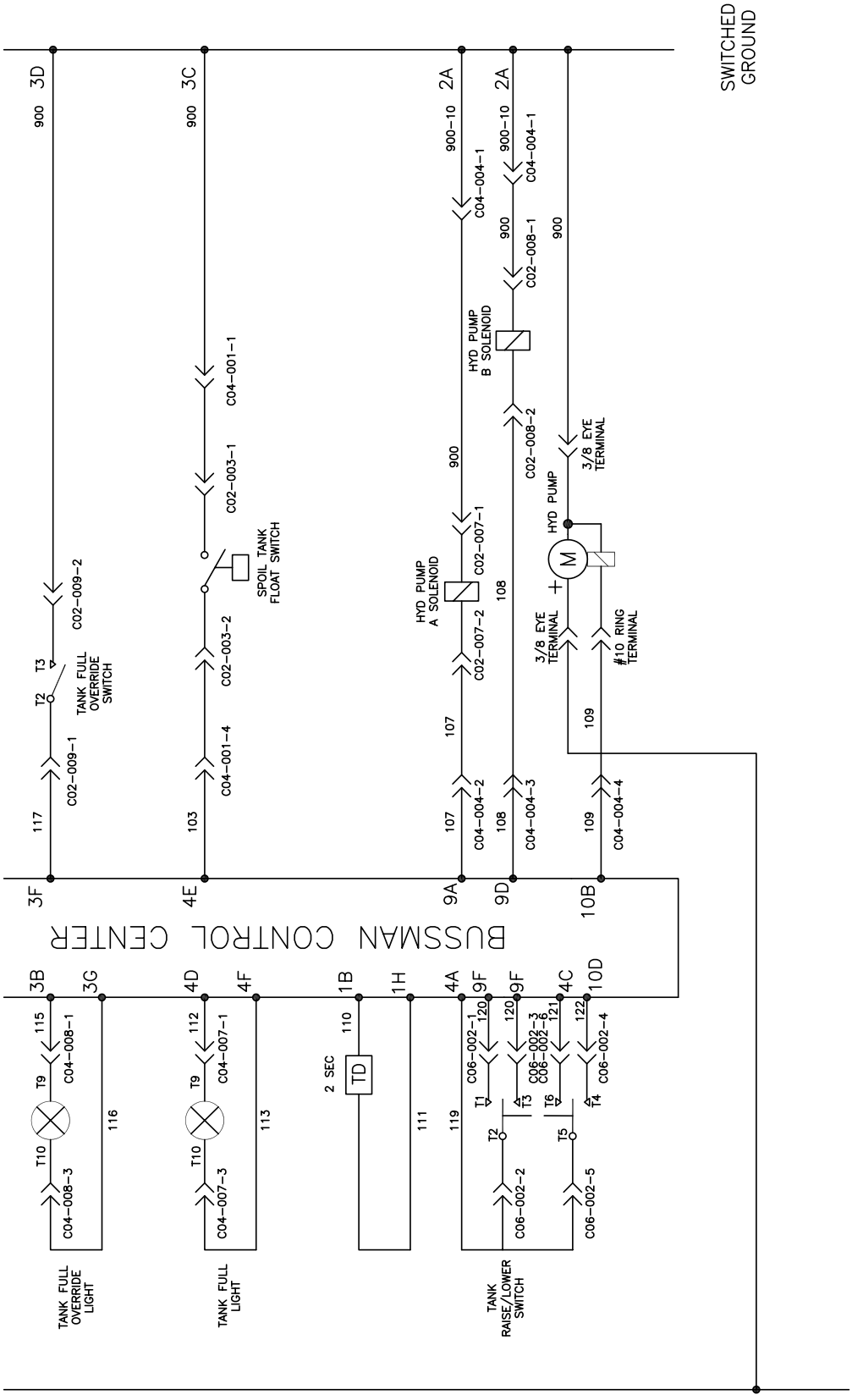

080108

Vacuum Diesel Engine Schematic

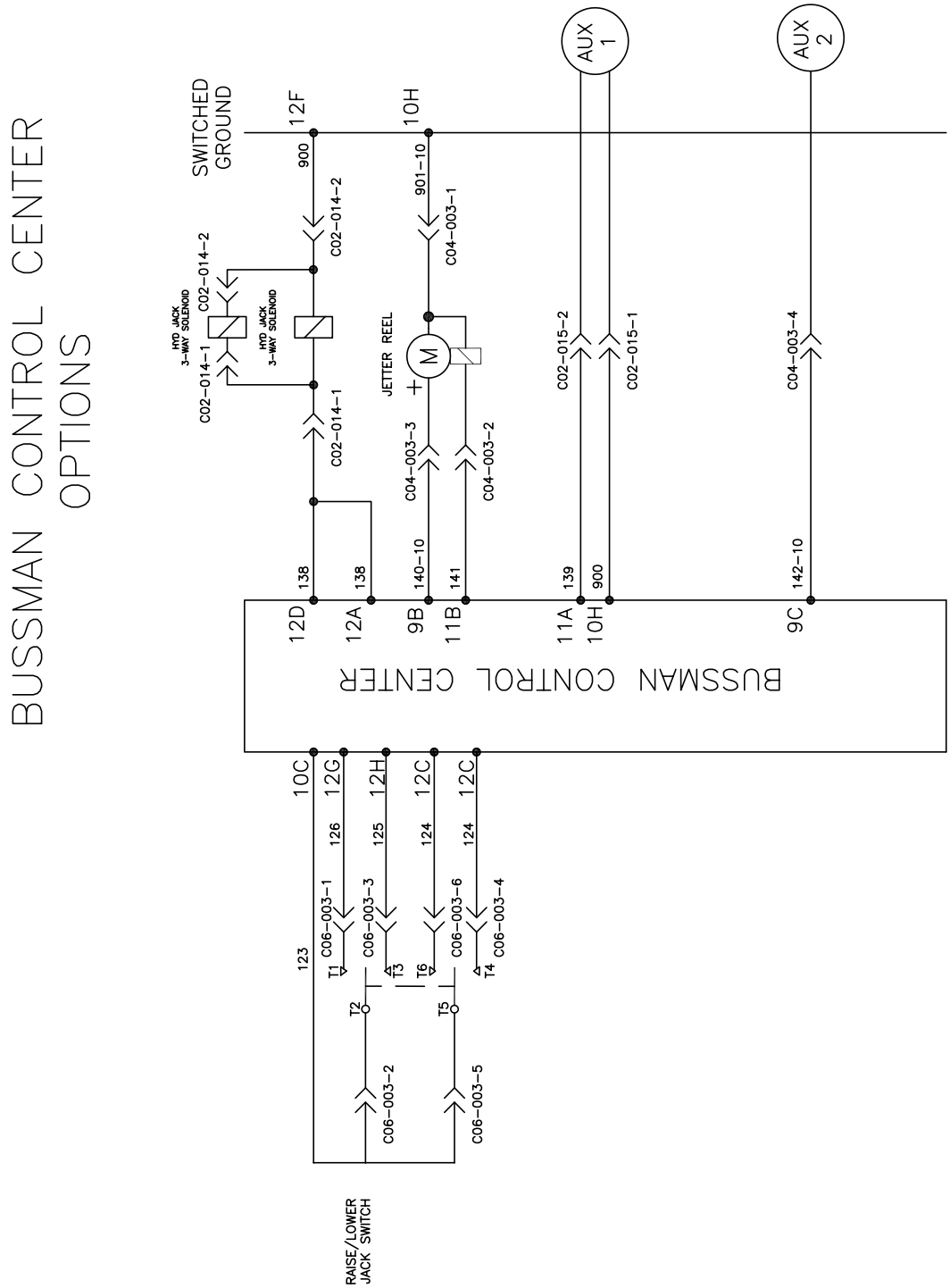

080108

PAGE LEFT BLANK

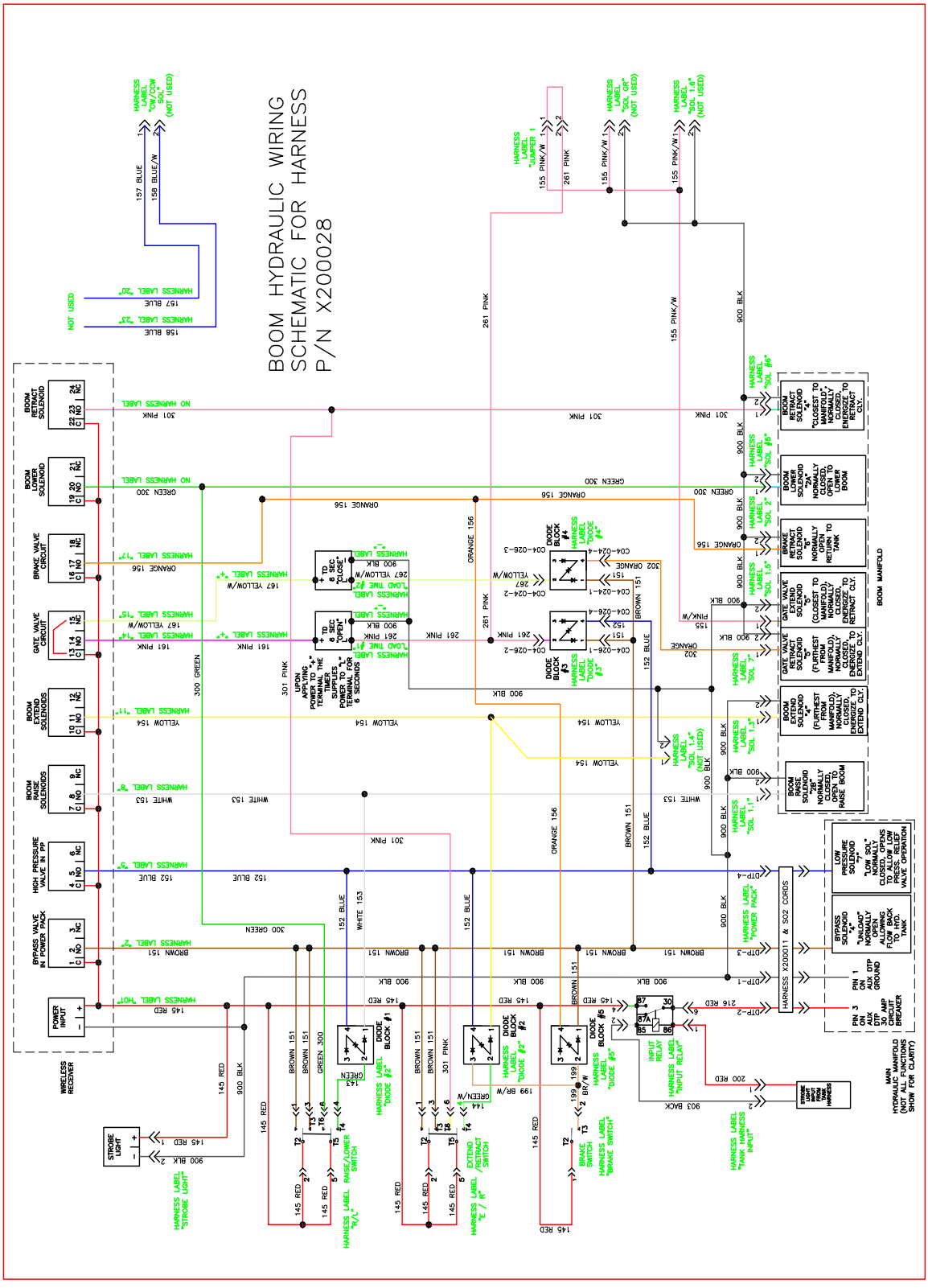
BOOM HYDRAULIC WIRING
SCHEMATIC FOR HARNESS
P/N X200028
BOOM MANIFOLD
MAIN HYDRAULIC MANIFOLD (NOT ALL FUNCTIONS SHOWN FOR CLARITY)
WIRELESS RECEIVER
POWER INPUT
STROBE LIGHT
BYPASS VALVE IN POWER PACK
HIGH PRESSURE VALVE IN PP
BOOM RAISE SOLENOIDS
BOOM EXTEND SOLENOIDS
GATE VALVE CIRCUIT
BRAKE VALVE CIRCUIT
BOOM LOWER SOLENOID
BOOM RETRACT SOLENOID
DIODE BLOCK #1
DIODE BLOCK #2
DIODE BLOCK #3
DIODE BLOCK #4
DIODE BLOCK #5
INPUT RELAY
BRAKE SWITCH
EXTEND /RETRACT SWITCH
RAISE/LOWER SWITCH
HARNESS X200011 & SO2 CORDS
HARNESS LABEL "POWER PACK"
HARNESS LABEL "TANK HARNESS INPUT"
HARNESS LABEL "INPUT RELAY"
HARNESS LABEL "BRAKE SWITCH"
HARNESS LABEL "E / R"
HARNESS LABEL "R/L"
HARNESS LABEL "STROBE LIGHT"
HARNESS LABEL "DIODE #1"
HARNESS LABEL "DIODE #2"
HARNESS LABEL "DIODE #3"
HARNESS LABEL "DIODE #4"
HARNESS LABEL "DIODE #5"
HARNESS LABEL "JUMPER 1"
HARNESS LABEL "SOL 1.1"
HARNESS LABEL "SOL 1.3"
HARNESS LABEL "SOL 1.4" (NOT USED)
HARNESS LABEL "SOL 1.5"
HARNESS LABEL "SOL 2"
HARNESS LABEL "SOL #6"
HARNESS LABEL "SOL 7"
HARNESS LABEL "SOL GR" (NOT USED)
HARNESS LABEL "SOL 1.6" (NOT USED)
HARNESS LABEL "CW/CCW SOL" (NOT USED)
NOT USED
LOW PRESSURE RELIEF SOLENOID "LOW SOL" NORMALLY CLOSED, OPENS TO ALLOW LOW PRESS. RELIEF VALVE OPERATION
BYPASS SOLENOID "UNLOAD" NORMALLY OPEN ALLOWING FLOW BACK TO HYD. TANK
BOOM RETRACT SOLENOID "4" (CLOSEST TO MANIFOLD) NORMALLY CLOSED, ENERGIZE TO RETRACT CLY.
BOOM LOWER SOLENOID "2A" NORMALLY CLOSED, TO OPEN TO LOWER BOOM
BRAKE RETRACT SOLENOID "6" NORMALLY OPEN TO RETURN TO TANK
GATE VALVE EXTEND SOLENOID "5" (CLOSEST TO MANIFOLD) NORMALLY CLOSED, ENERGIZE TO RETRACT CLY.
GATE VALVE RETRACT SOLENOID "3" (FURTHEST FROM MANIFOLD) NORMALLY CLOSED, ENERGIZE TO EXTEND CLY.
BOOM EXTEND SOLENOID "1" (FURTHEST FROM MANIFOLD) NORMALLY CLOSED, ENERGIZE TO EXTEND CLY.
BOOM RAISE SOLENOID NORMALLY CLOSED, ENERGIZE TO RAISE BOOM
PIN 1 ON AUX DTP GROUND
PIN 3 ON AUX DTP 30 AMP CIRCUIT BREAKER
UPON APPLYING "+" POWER TO TERMINAL "A" THIS TIMER SUPPLIES "+" POWER TO TERMINAL "B" FOR 6 SECONDS
6 SEC TIMER CLOSE
6 SEC TIMER OPEN
LOAD TIME #1
LOAD TIME #2
157 BLUE
158 BLUE/W
158 BLUE
261 PINK
155 PINK/W
900 BLK
301 PINK
GREEN 300
ORANGE 156
167 YELLOW/W
161 PINK
YELLOW 154
WHITE 153
152 BLUE
300 GREEN
BROWN 151
145 RED
216 RED
199 BR/W
GREEN/W
301 PINK
267 YELLOW/W
302 ORANGE
151
152
154
903 BACK
200 RED
145 BLK
900 BLK
STRAIGHT THRU CIRCUIT FROM TANK HARNESS

PAGE LEFT BLANK

Arrow Board Option

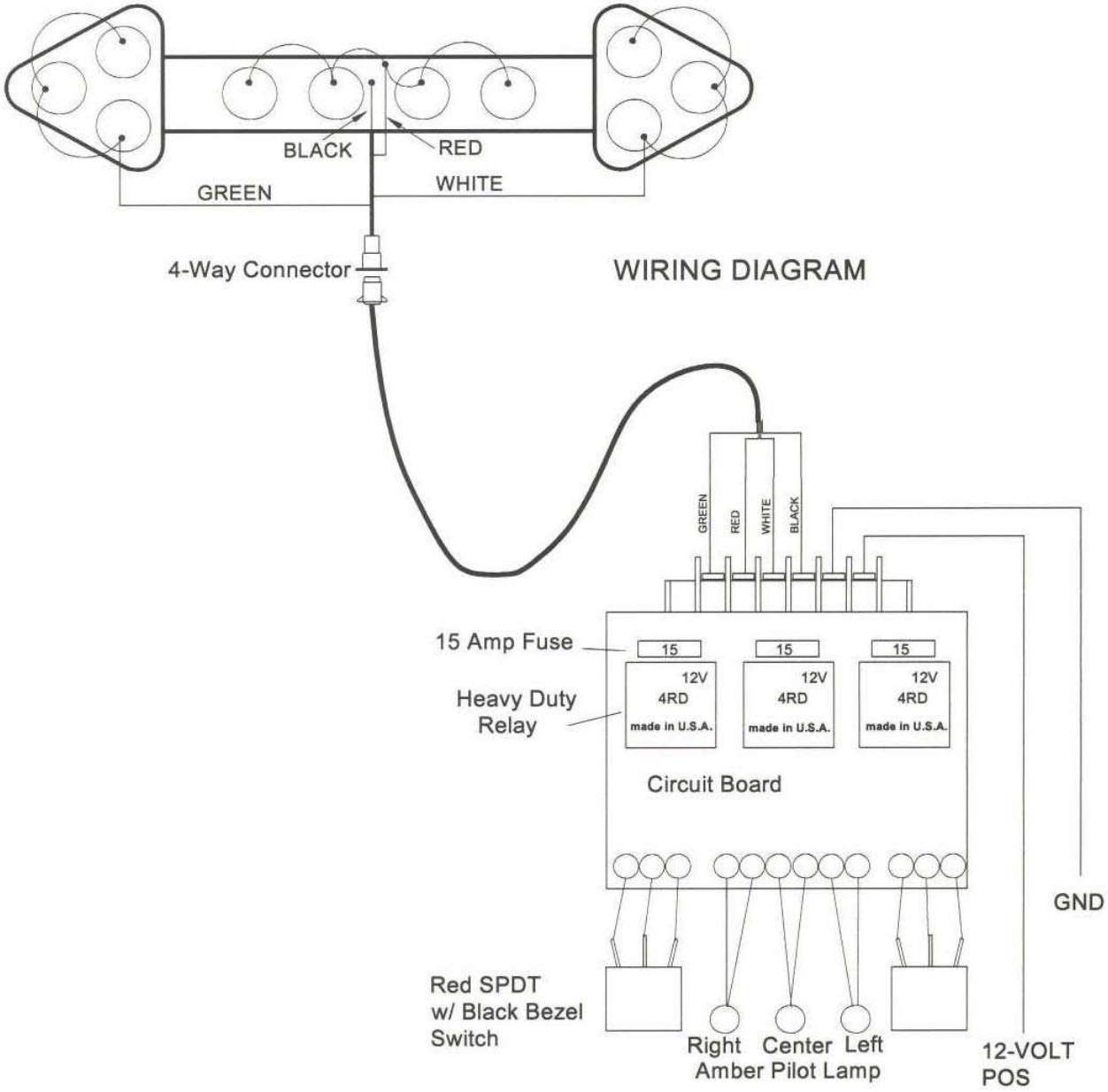

073008

VACASSY947

PAGE LEFT BLANK

MCLAUGHLIN – HOT BOX WIRING SCHEMATIC

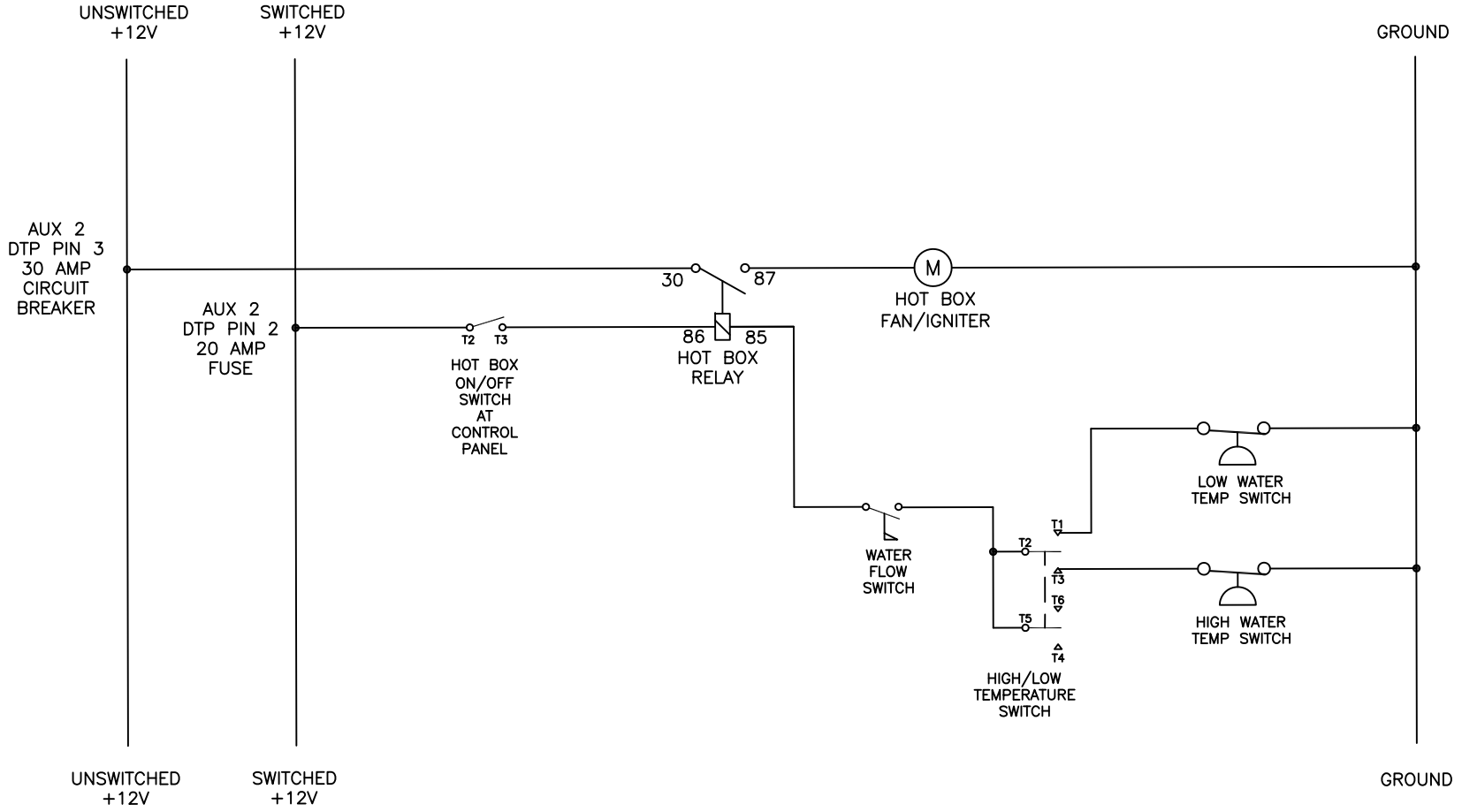

PAGE LEFT BLANK

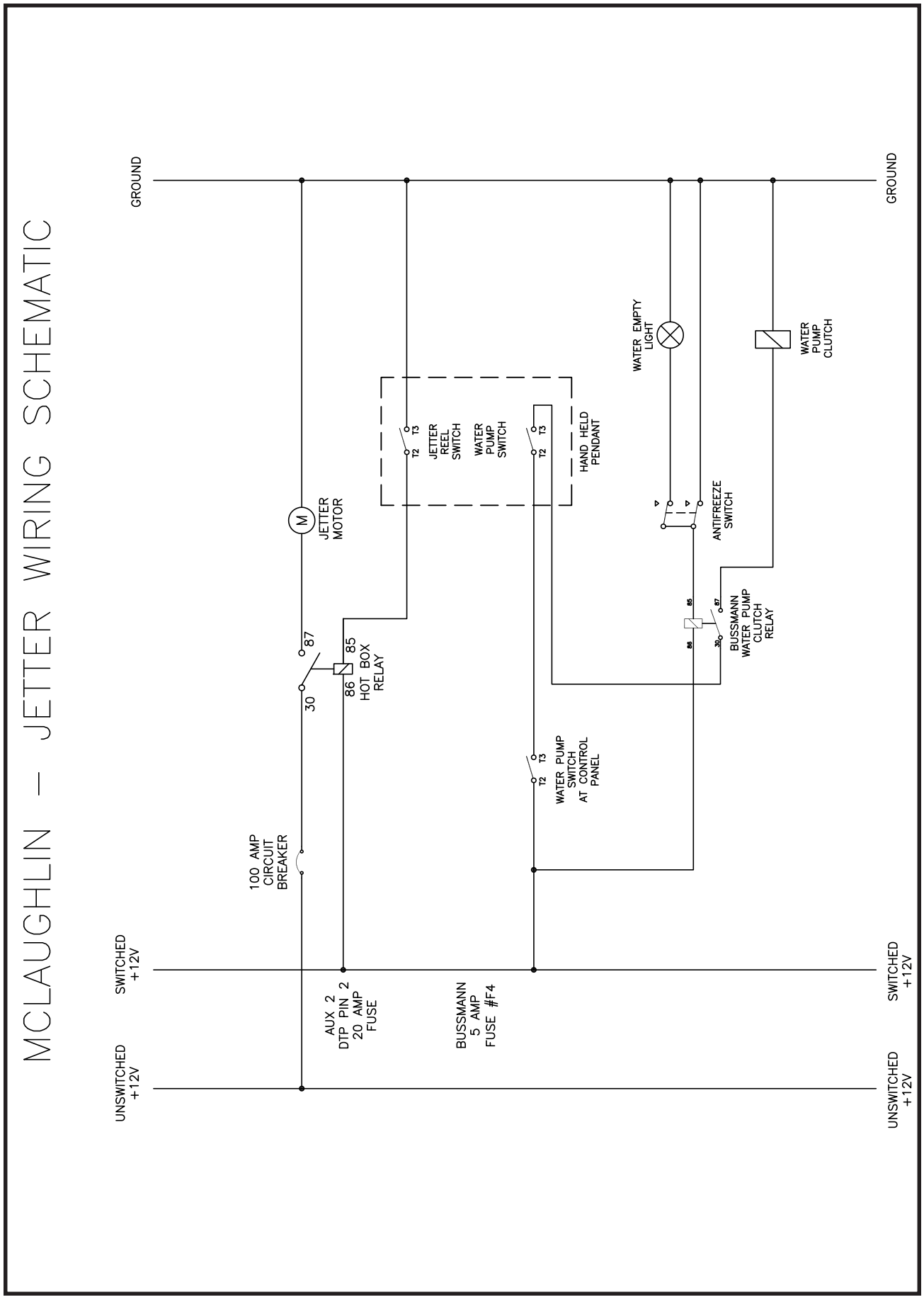
MCLAUGHLIN – JETTER WIRING SCHEMATIC
GROUND
GROUND
SWITCHED +12V
SWITCHED +12V
UNSWITCHED +12V
UNSWITCHED +12V
100 AMP CIRCUIT BREAKER
AUX 2 DTP PIN 2 20 AMP FUSE
BUSSMANN 5 AMP FUSE #F4
JETTER MOTOR
87
30
86
85
HOT BOX RELAY
JETTER REEL SWITCH
WATER PUMP SWITCH
HAND HELD PENDANT
WATER PUMP SWITCH AT CONTROL PANEL
WATER EMPTY LIGHT
ANTIFREEZE SWITCH
BUSSMANN WATER PUMP CLUTCH RELAY
WATER PUMP CLUTCH

PAGE LEFT BLANK

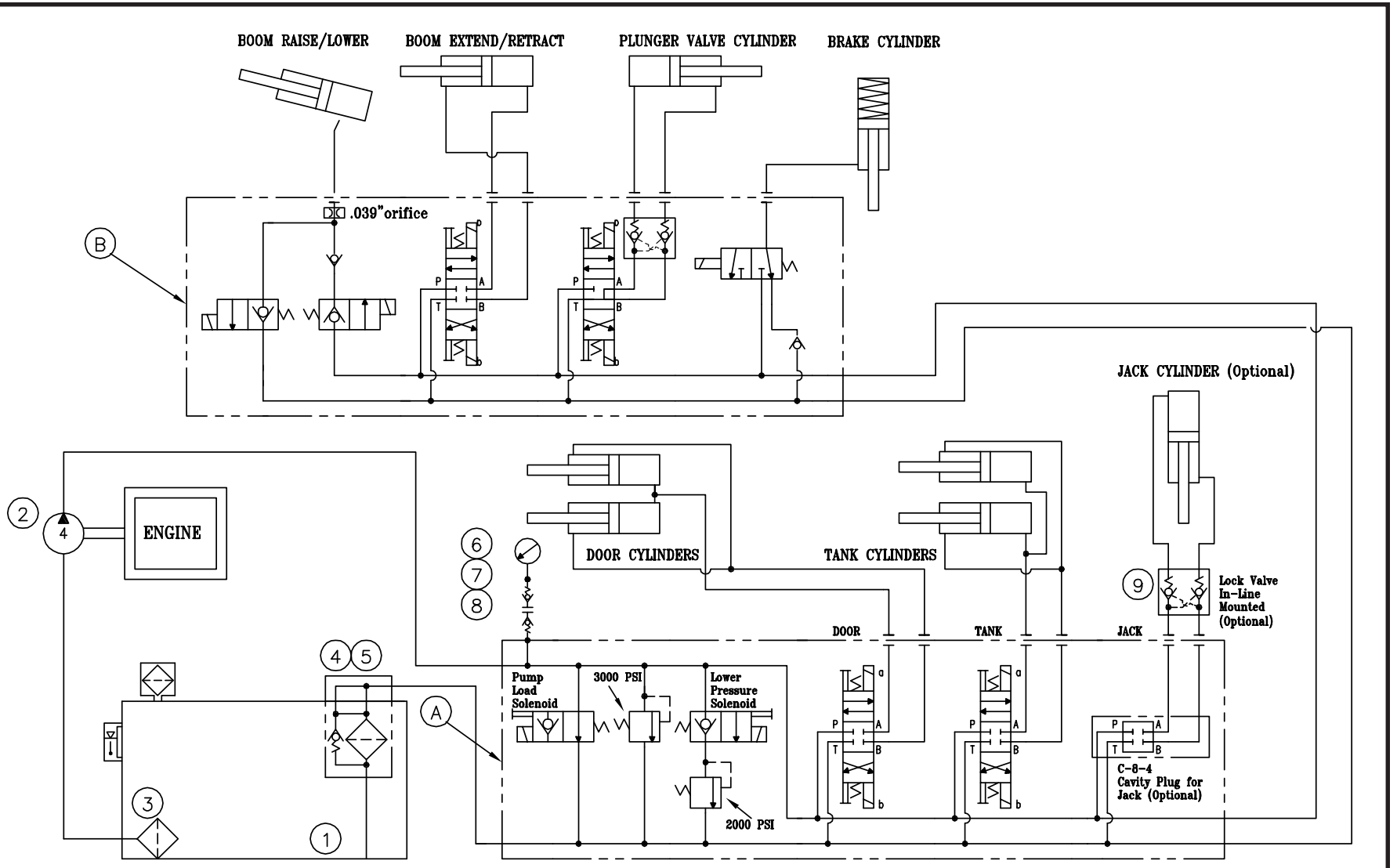

VACUUM SYSTEM
WITH BOOM
HYDRAULIC SCHEMATIC

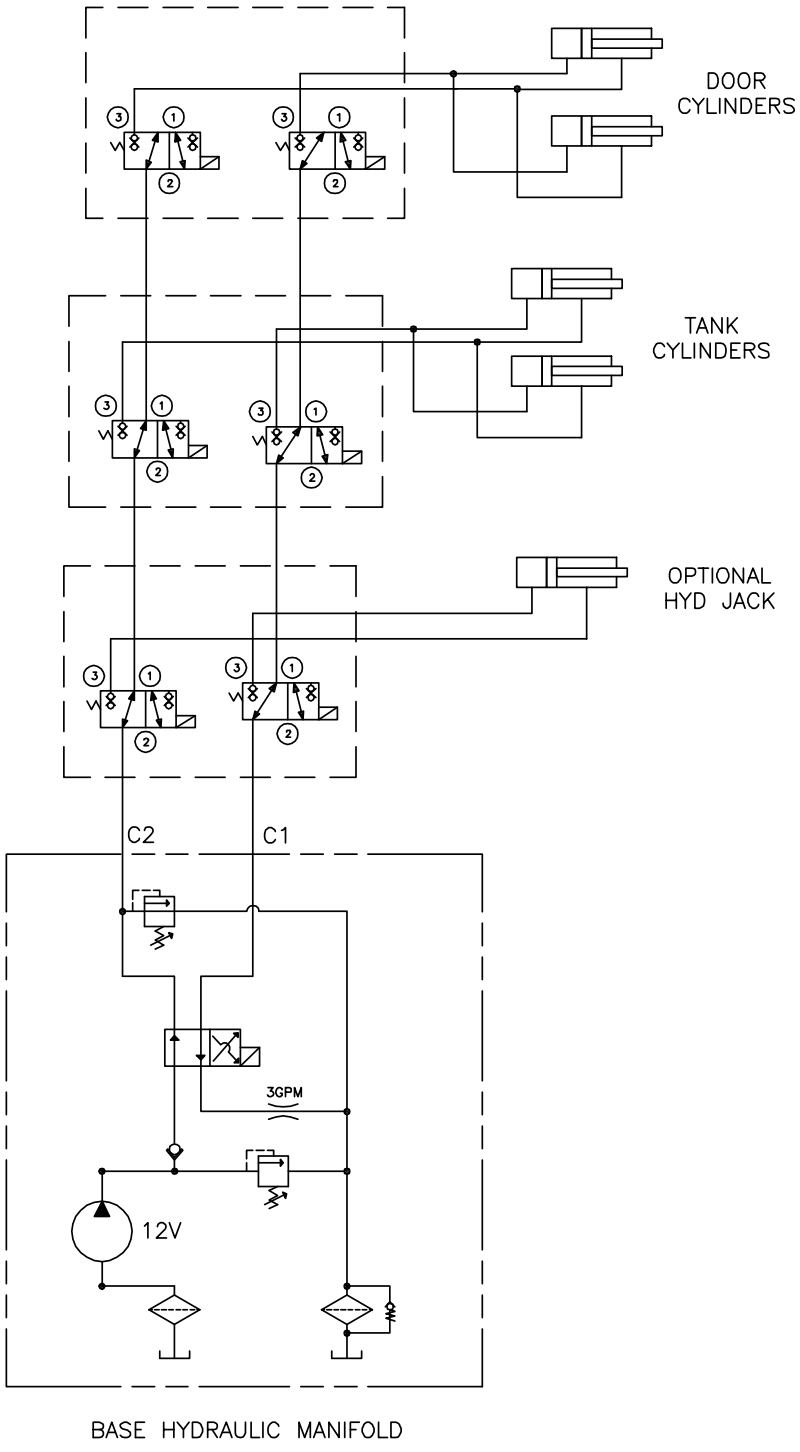

VACUUM SYSTEM
W/O BOOM
12V HYDRAULIC SCHEMATIC

PAGE LEFT BLANK

Universal URAI-DSL

Contents

Information Summary
Safety Precautions
Operating Limitations
Lubrication
Operatioin
Troubleshooting
Inspection & Maintenance
Data
Assembly Drawings
Parts List

Do These Things To Get The Most From Your ROOTS™ blower

- **Make sure both driving and driven equipment is correctly lubricated before start-up. See LUBRICATION.**

- In event of trouble during installation or operation, do not attempt repairs of ROOTS furnished equipment. Notify ROOTS, giving all nameplate information plus an outline of operating conditions and a description of the trouble. Unauthorized attempts at equipment repair may void ROOTS warranty.

- Units out of warranty may be repaired or adjusted by the owner. Good inspection and maintenance practices should reduce the needs for repairs.

NOTE: Information in this manual is correct as of the date of publication. ROOTS reserves the right to make design or material changes without notice, and without obligation to make similar changes without notice, and without obligation to make similar changes on equipment of prior manufacture.

DRESSER
Roots

Safety Precautions

It is important that all personnel observe safety precautions to minimize the chances of injury. Among many considerations, the following should be particularly noted:

- Blower casing and associated piping or accessories may become hot enough to cause major skin burns on contact.
- Internal and external rotating parts of the blower and driving equipment can produce serious physical injuries. Do not reach into any opening in the blower while it is operating, or while subject to accidental starting. Protect external moving parts with adequate guards.
- Disconnect power before doing any work, and avoid bypassing or rendering inoperative any safety or protective devices.
- If blower is operated with piping disconnected, place a strong coarse screen over the inlet and avoid standing in the discharge air stream. **CAUTION: Never cover the blower inlet with your hand or other part of body.**
- Stay clear of the blast from pressure relief valves and the suction area of vacuum relief valves.
- Use proper care and good procedures in handling, lifting, installing, operating and maintaining the equipment.
- Casing pressure must not exceed 25 PSI (1725 mbar) gauge. Do not pressurize vented cavities from an external source, nor restrict the vents without first consulting Roots.
- Do not use air blowers on explosive or hazardous gases.
- Other potential hazards to safety may also be associated with operation of this equipment. All personnel working in or passing through the area should be trained to exercise adequate general safety precautions.

Operating Limitations

A ROOTS blower or exhauster must be operated within certain approved limiting conditions to enable continued satisfactory performance. Warranty is contingent on such operation.

Maximum limits for pressure, temperature and speed are specified in TABLE 1 for various models & sizes of blowers & exhausters. These limits apply to all units of normal construction, when operated under standard atmospheric conditions. Be sure to arrange connections or taps for instruments, thermometers and pressure or vacuum gauges at or near the inlet and discharge connections of the unit. These, along with a tachometer, will enable periodic checks of operating conditions.

PRESSURE – The pressure rise, between inlet and discharge, must not exceed the figure listed for the specific unit frame size concerned. Also, in any system where the unit inlet is at a positive pressure above atmosphere a maximum case rating of 25 PSI gauge (1725 mbar) should not be exceeded without first consulting Roots. Never should the maximum allowable differential pressure be exceeded.

On vacuum service, with the discharge to atmospheric pressure, the inlet suction or vacuum must not be greater than values listed for the specific frame size.

TEMPERATURE – Blower & exhauster frame sizes are approved only for installations where the following temperature limitations can be maintained in service:

- Measured temperature rise must not exceed listed values when the inlet is at ambient temperature. Ambient is considered as the general temperature of the space around the unit. This is not outdoor temperature unless the unit is installed outdoors.
- If inlet temperature is higher than ambient, the listed allowable temperature rise values must be reduced by 2/3 of the difference between the actual measured inlet temperature and the ambient temperature.
- The average of the inlet and discharge temperature must not exceed 250°F. (121°C).
- The ambient temperature of the space the blower/motor is installed in should not be highter than 120°F (48.8°C).

SPEED – These blowers & exhausters may be operated at speeds up to the maximum listed for the various frame sizes. They may be direct coupled to suitable constant speed drivers if pressure/temperature conditions are also within limits. At low speeds, excessive temperature rise may be a limiting factor.

Special Note: The listed maximum allowable temperature rise for any particular blower & exhauster may occur well before its maximum pressure or vacuum rating is reached. This may occur at high altitude, low vacuum or at very low speed. The units' operating limit is always determined by the maximum rating reached first. It can be any one of the three: Pressure, Temperature or Speed.

For Units with Splash Lubrication on Both Ends

Bearings and oil seals are lubricated by the action of the timing gears or oil slingers which dip into the main oil sumps

causing oil to splash directly on gears and into bearings and seals. A drain port is provided below each bearing to prevent an excessive amount of oil in the bearings. Seals located inboard of the bearings in each headplate effectively retain oil within the sumps. Any small leakage that may occur should the seals wear passes into a cavity in each vented headplate and is drained downward.

Oil sumps on each end of the blower are filled by removing top vent plugs, Item (25), and filling until oil reaches the middle of the oil level sight gauge when the unit is not operating, Item (45 or 53), DO NOT FILL PAST THE MIDDLE OF THE SIGHT GLASS.

Initial filling of the sumps should be accomplished with the blower not operating, in order to obtain the correct oil level. Approximate oil quantities required for blowers of the various models and configurations are listed in Table 3. Use a good grade of industrial type non-detergent, rust inhibiting, anti-foaming oil and of correct viscosity per Table 2. ***ROOTS synthetic oil (Roots P/N 813-106-) is specified and recommended.** Roots does not recommend automotive type lubricants, as they are not formulated with the properties mentioned above.

The oil level may rise or fall on the gauge during operation, to an extent depending somewhat on oil temperature and blower speed.

Proper lubrication is usually the most important single consideration in obtaining maximum service life and satisfactory operation from the unit. Unless operating conditions are quite severe, a weekly check of oil level and necessary addition of lubricant should be sufficient. During the first week of operation, check the oil levels in the oil sumps about once a day, and watch for leaks. Replenish as necessary. Thereafter, an occasional check should be sufficient. It is recommended that the oil be changed after initial 100 hours of operation. Frequent oil changing is not necessary unless the blower is operated in a very dusty location.

Normal life expectancy of petroleum based oils is about 2000 hours with an oil temperature of about 180°F (82°C). As the oil temperature increases by increments of 15-18°F (8°C - 10°C), the life is reduced by half. Example: Oil temperatures of 210-216°F (99°C - 102°C) will produce life expectancy of 1/4 or 500 hours. Therefore, it is considered normal to have oil change periods of 500 hours with petroleum based oils.

Normal life expectancy of ROOTS™ Synthetic Oil is about 4000 to 8000 hours with an oil temperature of about 180°F (82°C). As the oil temperature increases by increments of 15-18°F (8°C - 10°C), the life is reduced by half. Example: Oil temperatures of 210-216°F (99°C - 102°C) will produce life expectancy of 1/4 or 1000 to 2000 hours.

NOTE: To estimate oil temperature, multiply the discharge temperature of the blower by 0.80. Example: if the discharge air temperature of the blower is 200° F, it is estimated that the oil temperature is 160° F.

*ROOTS™ Synthetic Oil & Grease is superior in performance to petroleum based products. It has high oxidation stability, excellent corrosion protection, extremely high film strength and low coefficient of friction. Typical oil change intervals are increased 2-3 times over petroleum based lubricants. Also, ROOTS™ Synthetic Oil is 100% compatible with petroleum based oils. Simply drain the oil in the blower and refill the reservoirs with ROOTS™ Synthetic Oil to maintain optimum performance of your ROOTS™ blower.

Operation

Before operating a blower under power for the first time, recheck the unit and the installation thoroughly to reduce the likelihood of avoidable troubles. Use the following procedure check list as a guide, but consider any other special conditions in the installation.

- ❑ Be certain that no bolts, tools, rags, or debris have been left in the blower air chamber or piping.
- ❑ If an outdoor intake without filter is used, be sure the opening is located so it cannot pick up dirt and is protected by a strong screen or grille. Use of the temporary protective screen as described under INSTALLATION is strongly recommended.
- ❑ Recheck blower leveling, drive alignment and tightness of all mounting bolts if installation is not recent. If belt drive is used, adjust belt tension correctly.
- ❑ Turn drive shaft by hand to make sure impellers still rotate without bumping or rubbing at any point.
- ❑ Ensure oil levels in the main oil sumps are correct.
- ❑ Check lubrication of driver. If it is an electric motor, be sure that power is available and that electrical overload devices are installed and workable.
- ❑ Open the manual unloading valve in the discharge air line. If a valve is in the inlet piping, be sure it is open.
- ❑ Bump blower a few revolutions with driver to check that direction of rotation agrees with arrow near blower shaft, and that both coast freely to a stop.

After the preceding points are cleared, blower is ready for trial operation under "no-load" conditions. The following procedure is suggested to cover this initial operation test period.

a. Start blower, let it accelerate to full speed, then shut off. Listen for knocking sounds, both with power on and as speed slows down.

b. After blower comes to a complete stop, repeat above, but let blower run 2 or 3 minutes. Check for noises, such as knocking sounds.

c. After blower comes to a complete stop, operate blower for about 10 minutes unloaded. Check oil levels. Observe cylinder and headplate surfaces for development of hot spots such as burned paint, indicating impeller rubs. Be aware of any noticeable increase in vibration.

Assuming that all trials have been satisfactory, or that necessary corrections have been made, the blower should now have a final check run of at least one hour under normal operating conditions. After blower is restarted, gradually close the discharge unloading valve to apply working pressure. At this point it is recommended that a pressure gauge or manometer be connected into the discharge line if not already provided, and that thermometers be in both inlet and discharge lines. Readings from these instruments will show whether pressure or temperature ratings of the blower are being exceeded.

During the final run, check operating conditions frequently and observe the oil levels at reasonable intervals. If excessive noise or local heating develops, shut down immediately and determine the cause. If either pressure rise or temperature rise across the blower exceeds the limit specified in this manual, shut down and investigate conditions in the piping system. Refer to the TROUBLESHOOTING CHECKLIST for suggestions on various problems that may appear.

The blower should now be ready for continuous duty operation at full load. During the first few days make periodic checks to determine whether all conditions remain steady, or at least acceptable. This may be particularly important if the blower is supplying air to a process system where conditions can vary. At the first opportunity, stop the blower and clean the temporary inlet protective screen. If no appreciable amount of debris has collected, the screen may be removed. See comments under INSTALLATION. At this same time, verify leveling, coupling alignment or belt tension, and mounting bolt tightness.

Should operating experience prove that blower capacity is a little too high for the actual air requirements, a small excess may be blown off continuously through the manual unloading or vent valve. Never rely on the pressure relief valve as an automatic vent. Such use may cause the discharge pressure to become excessive, and can also result in failure of the valve itself. If blower capacity appears to be too low, refer to the TROUBLESHOOTING CHECKLIST.

Vibration Assessment Criteria

With measurements taken at the bearing locations on the housings, see chart below for an appropriate assessment guide for rotary lobe blowers rigidly mounted on stiff foundations.

In general, blower vibration levels should be monitored on a regular basis and the vibration trend observed for progressive or sudden change in level. If such a change occurs, the cause should be determined through spectral analysis.

As shown on the chart below, the level of all pass vibration will determine the need to measure discrete frequency vibration levels and the action required.

All Pass Vibration (in/sec)	Discrete Frequency Vibration (in/sec)	Action
0.45 or less	N/R	Acceptable
Greater than 0.45 but 1.0 or less	0.45 or less @ any frequency	Acceptable
	Greater than 0.45 @ any frequency	Investigate
Greater than 1.0	Less than 1.0	Investigate
	Greater than 1.0	Investigate

Troubleshooting Checklist

Trouble	Item	Possible Cause	Remedy
No flow	1	Speed too low	Check by tachometer and compare with published performance
	2	Wrong rotation	Compare actual rotation with Figure 1 Change driver if wrong
	3	Obstruction in piping	Check piping, valves, silencer to assure open flow path
Low capacity	4	Speed too low	See item 1, If belt drive, check for slippage and readjust tension
	5	Excessive pressure rise	Check inlet vacuum and discharge pressure and compare with Published performance
	6	Obstruction in piping	See item 3
	7	Excessive slip	Check inside of casing for worn or eroded surfaces causing excessive clearances
Excessive power	8	Speed too high	Check speed and compare with published performance
	9	Excessive pressure rise	See Item 5
	10	Impeller rubbing	Inspect outside of cylinder for high temperature areas, then check for impeller contact at these points. Correct blower mounting, drive alignment
	11	Scale, sludge, rust or product build up	Clean blower appropriately
Damage to bearings	12	Inadequate lubrication	Check oil sump levels in gear and drive end headplates
or gears	13	Excessive lubrication	Check oil levels. If correct, drain and refill with clean oil of recommended grade
	14	Excessive pressure rise	See Item 5
	15	Coupling misalignment	Check carefully. Realign if questionable
	16	Excessive belt tension	Readjust for correct tension
Vibration	17	Misalignment	See Item 15
	18	Impellers rubbing	See Item 10
	19	Worn bearings/gears	Check gear backlash and condition of bearings, and replace as indicated
	20	Unbalanced or rubbing impeller	Scale or process material may build up on casing and impellers, or inside impellers. Remove build-up to restore original clearances and impeller balance
	21	Driver or blower loose	Tighten mounting bolts securely
	22	Piping resonances	Determine whether standing wave pressure pulsations are present in the piping
	23	Scale/sludge build-ups	Clean out interior of impeller lobes to restore dynamic balance
	24	Casing strain	Re-work piping alignment to remove excess strain
Driver stops, or will not start	25	Impeller stuck	Check for excessive hot spot on headplate or cylinder. See item 10. Look for defective shaft bearing and/or gear teeth
	26	Scale, sludge, rust or product build-up	Clean blower appropriately
Excessive breather	27	Broken seal	Replace seals
Blow-by or excessive oil leakage to vent area	28	Defective O-ring	Replace seals and O-ring
Excessive oil leakage in vent area	29	Defective/plugged breather	Replace breather and monitor oil leakage
	30	Oil level too high	Check sump levels in gear and drive headplates.
	31	Oil type or viscosity incorrect	Check oil to insure it meets recommendations. Drain then fill with clean oil of recommended grade.
	32	Blower running hot	Check blower operating conditions to ensure they are within the operating limitations defined in this manual.

Inspection & Maintenance: Universal RAI® series blowers

A good program of consistent inspection and maintenance is the most reliable method of minimizing repairs to a blower. A simple record of services and dates will help keep this work on a regular schedule. Basic service needs are:

- Lubrication
- Checking for hot spots
- Checking for increases or changes in vibration and noise
- Recording of operating pressures and temperatures

Above all, a blower must be operated within its specified rating limits, to obtain satisfactory service life.

A newly installed blower should be checked often during the first month of full-time operation. Attention there after may be less frequent assuming satisfactory performance. Lubrication is normally the most important consideration and weekly checks of lubricant levels in the gearbox and bearing reservoirs should be customary. Complete oil change schedules are discussed under **LUBRICATION.**

Driver lubrication practices should be in accordance with the manufacturer's instructions. If direct connected to the blower through a lubricated type coupling, the coupling should be checked and greased each time blower oil is changed. This will help reduce wear and prevent unnecessary vibration. In a belted drive system, check belt tension periodically and inspect for frayed or cracked belts.

In a new, and properly installed, unit there is no contact between the two impellers, or between the impellers and cylinder or headplates. Wear is confined to the bearings (which support and locate the shafts) the oil seals, and the timing gears. All are lubricated and wear should be minimal if clean oil of the correct grade is always used. Seals are subject to deterioration as well as wear, and may require replacement at varying periods.

Shaft bearings are designed for optimum life under average conditions with proper lubrication and are critical to the service life of the blower. Gradual bearing wear may allow a shaft position to change slightly, until rubbing develops between impeller and casing. This will cause spot heating, which can be detected by observing these surfaces. Sudden bearing failure is usually more serious. Since the shaft and impeller are no longer supported and properly located, extensive general damage to the blower casing and gears is likely to occur.

Oil seals should be considered expendable items, to be replaced whenever drainage from the headplate vent cavity becomes excessive or when the blower is disassembled for any reason. Some oil seal leakage may occur since an oil film under the lip is required for proper operation. Periodically leaked oil should be wiped off from surfaces. Minor seal leakage should not be considered as indicating seal replacement.

Timing gear wear, when correct lubrication is maintained, should be negligible. Gear teeth are cut to provide the correct amount of backlash, and gears correctly mounted on the shafts will accommodate a normal amount of tooth wear without permitting contact between lobes of the two impellers. However, too high an oil level will cause churning and excessive heating. This is indicated by unusually high temperature at the bottom of the gear housing. Consequent heating of the gears will result in loss of tooth-clearance , backlash and rapid wear of the gear teeth usually will develop. Continuation of this tooth wear will eventually produce impeller contacts (knocking), and from this point serious damage will be unavoidable if blower operation is continued. A similar situation can be produced suddenly by gear tooth fracture, which is usually brought on by sustained overloading or momentary shock loads.

Problems may also develop from causes other than internal parts failure. Operating clearances within a blower are only a few thousandths of an inch. This makes it possible for impeller interference or casing rubs to result from shifts in the blower mounting, or from changes in piping support. If this type of trouble is experienced, and the blower is found to be clean, try removing mounting strains. Loosen blower mounting bolts and reset the leveling and drive alignment. Then tighten mounting again, and make sure that all piping meets blower connections accurately and squarely Foreign materials in the blower will also cause trouble, which can only be cured by disconnecting the piping and thoroughly cleaning the blower interior.

A wide range of causes & solutions for operating troubles are covered in the **TROUBLE SHOOTING CHECKLIST.** The remedies suggested should be performed by qualified mechanics with a good background. Major repairs generally are to be considered beyond the scope of maintenance, and should be referred to an authorized Roots distributor.

Warranty failures should not be repaired at all, unless specific approval has been obtained through Roots before starting work. Unauthorized disassembly within the warranty period may void the warranty.

Figure 2 - Allowable Overhung Loads for V-Belt Drives Universal RAI®/URAI®-DSL Units

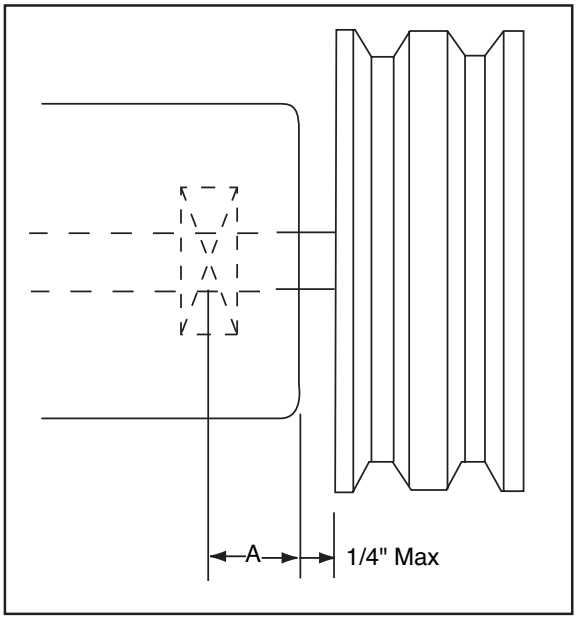

$$\text{Belt Pull lbs} = \frac{252100 \bullet \text{Motor HP}}{\text{Blower RPM} \bullet \text{Sheave Diameter}}$$

$$\text{Shaft Load (lb.in)} = \text{Belt Pull} \bullet \left(A + 1/4\text{”} + \frac{\text{Sheave Width}}{2}\right)$$

Frame Size	Dimension "A"	Max Allowable Shaflt Load (lb-in)	Min Sheave Diameter
59	1.13	1,325	6.00

NOTE:
Arc of sheave belt contact on the smaller sheave not to be less than 170°
Driver to be installed on the inlet side for vertical units, and on the drive shaft side for horizontal units.
Roots recommends the use of two or more 3V, 5V or 8V matched set or banded belts and sheaves.

Specified Lubricants

ROOTS Synthetic Oil: ISO-VG-320 Grade

	Part Number
Quart	13106004
Gallon	13106005
Case (12 qts)	13106007

ROOTS Synthetic Oil: ISO-VG-220 Grade

	Part Number
Quart	13106001
Gallon	13106002
Case (12 qts)	13106008

ROOTS Synthetic Oil: ISO-VG-150 Grade

	Part Number
Quart	13106020
Gallon	13106021
Case (12 qts)	13106023
5 Gallon Pail	13106022
55 Gallon Drum	13106025

Drive End Breather Orientation for URA-DSL blowers with Oil Lube

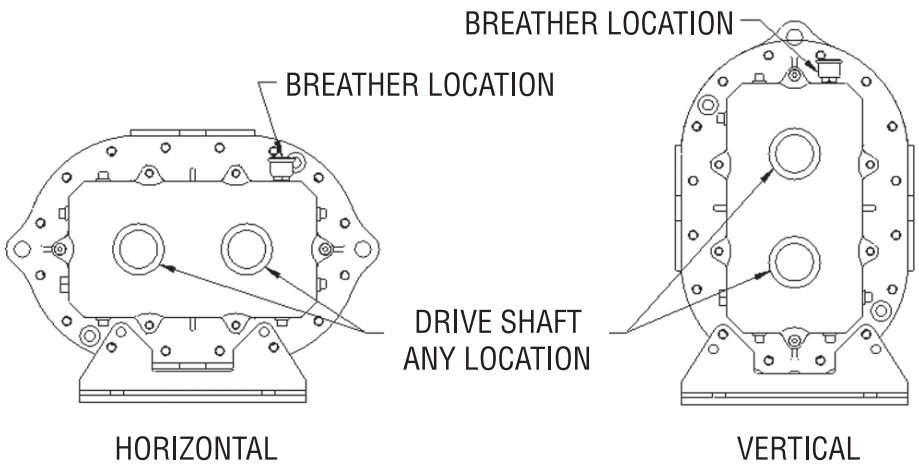

URAI DSL BREATHER ORIENTATION

Table 1 - URAI, URAI-DSL Blowers,
Maximum Allowable Operating Conditions

Frame Size	Gear Diameter (Inch)	Speed RPM	Temp. Rise Deg F (Deg C)	Delta Pressure PSI (mbar)	Inlet Vacuum INHG (mbar)
59	5	2,850	225 (125)	7 (483)	15 (500)

Table 2 - Recommended Oil Grades

Ambient Temperature °F (°C)	ISO Viscosity No.
Above 90° (32°)	320
32° to 90° (0° to 32°)	220
0° to 32° (-18° to 0°)	150
Below 0° (-18°)	100

Ambient temperature is defined as the temperature of the space in which the blower and drive are located.

Table 3 - Approximate Oil Sump Capacities

These capacities are provided to assist in stocking the correct amount of oil. Exact sump capacities may differ slightly. See "Lubrication" section for proper filling instructions.

URAI-DSL Splash Lubricated Blowers

Frame Size	Gear End Capacity Fl. Oz (Liters)	Drive End Capaicty Fl. Oz. (Liters)
59	27.6 (.82)	14.8 (.44)

Basic Connection & Drive Shaft Information

URAI DSL AIR BLOWERS (with Dual Splash Lubrication DSL)

BOM#	FRAME SIZE	INLET/DISCHARGE CONN.	SHAFT DIAMETER	BARE WEIGHT
T30361020	59	4" NPT	1.125	209

Universal RAI air blowers include detachable mounting feet which permit vertical or horizontal installation. The units are center timed for rotation in either direction. The bearings on the URAI are grease lubricated on the drive end and splash lubricated on the gear end. The URAI-DSL is splash lubricated on BOTH ends.

PAGE LEFT BLANK

PAGE LEFT BLANK

MODEL MSR-DC OIL BURNER

MODEL MSR-DC SPECIFICATIONS

FIRING CAPACITIES - MODEL MSR-DC

0.50 To 2.75 GALLONS PER HOUR

70,000 TO 385,000 BTU/HR INPUT

FUELS - MODEL MSR-DC

Use No. 1 or No. 2 Heating Oil (ASTM D-396), Kerosene, Diesel or Jp8 Jet Fuel.

NEVER attempt to use gasoline as a fuel for your burner, as it is more combustible and could result in a serious explosion.

NEVER burn garbage or refuse in the heating unit.

NEVER try to ignite by tossing burning paper or other materials into the heating unit.

NEVER burn waste or crankcase oil in the heating unit.

ELECTRICAL - MODEL MSR-DC

Power supply	13.0VDC Minimum (at Battery)
Motor	4500 RPM (Std) or 3950 RPM (low RPM), Ball Bearing, Permanent Magnet
Ignition	20,000V/28MA/50VA Secondary, Intermittent Duty Electronic Ignitor

DIMENSIONS - MSR-DC (Standard

Height.....12½"

Width .....13"

Depth .....6⅞"

FUEL UNIT

Suntec and DanFoss brands

MOUNTING

Rigid Flange, Adjustable Flange or Base mount.

DC OIL BURNER ELECTRICAL CONSIDERATIONS

* Not all generators are equally capable. A minimum of 13.0 volts must be provided at the battery.
* Generators should be operated at the maximum rated RPM during burner operation.
* Good quality batteries are strongly suggested. Batteries with higher Cold Cranking Amp (CCA) rating and deep draw/marine type batteries are recommended.
* Use automotive rated battery cabling. All other wiring should be OEM suggested wire type and gauge.
* Protect all wiring connection points with dielectric grease.
* Ambient temperature impacts electrical requirements. Higher temperatures will result in higher amp draws.
* Increased pump operating pressure settings will increase amp draw.
* Higher gallon rate nozzles and accompanying wider air band openings will increase amp draw.

INSTALLATION OF BURNER

INSTALLATION OF THE BURNER MUST BE DONE BY A QUALIFIED INSTALLER IN ACCORDANCE WITH REGULATIONS OF THE NATIONAL FIRE PROTECTION STANDARD FOR OIL-BURNING EQUIPMENT, NFPA NO. 31, AND IN COMPLETE ACCORDANCE WITH ALL LOCAL CODES AND AUTHORITIES HAVING JURISDICTION.

A QUALIFIED INSTALLER IS THE PERSON WHO IS RESPONSIBLE FOR THE INSTALLATION AND ADJUSTMENT OF THE EQUIPMENT AND WHO IS LICENSED TO INSTALL OIL-BURNING EQUIPMENT IN ACCORDANCE WITH ALL CODES AND ORDINANCES. WARRANTY IS VOIDED IF NOT INSTALLED BY SERVICE PERSON.

THESE INSTRUCTIONS SHOULD BE AFFIXED TO THE BURNER OR ADJACENT TO THE HEATING APPLIANCE.

TO THE CLEANING EQUIPMENT OWNER

Since 1970, Wayne has supplied the hot water pressure washer cleaning equipment industry with oil burners. You are obtaining a quality burner unsurpassed in engineering design and product development. It will provide you with many years of efficient trouble-free operation, if properly installed and serviced. Please read this manual carefully.

Wayne warrants its burners specifically to those who have purchased it for resale, including your dealer. If, in any case, you have a problem with your burner, or its installation, you should contact your dealer or the cleaning equipment manufacturer for assistance.

FUEL UNITS AND OIL LINES

The model MSR-DC oil burner is provided with a single stage 3450 RPM fuel unit with by-pass plug removed for a single pipe installation; the by-pass plug for two pipe (inlet and return) is provided in the plastic bag attached to the fuel unit.

The installation of fuel filters are recommended. Check supply tank for sludge accumulation and leakage. Use only flare fittings on all piping and connections since compression fittings will eventually leak. With the system running, the vacuum should not exceed 12" mercury for single stage units. For ease of servicing, install a shut off valve near burner.

WIRING

The MSR-DC oil burner must be electrically wired and GROUNDED in accordance with local codes or in their absence, with National Electric Code ANS/NFPA No. 70-latest edition.

This oil burner requires a 12-volt DC power source. Use copper wire only not lighter than #12 awg. If a fused disconnect is used, it should be fused for a minimum of 20 amps. Refer to the wiring diagram in this manual or cleaning equipment manufacturers manual making sure the burner and controls are wired correctly.

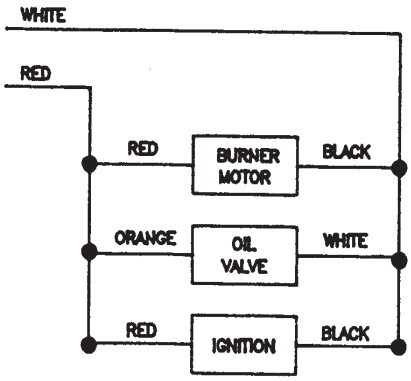

AIR SUPPLY FOR COMBUSTION

The oil burner fired hot water pressure washer shall not be installed in an area where facilities for normal air circulation or infiltration are so limited as to interfere with ready attainment of all necessary for proper combustion and venting. When the heating appliance is installed in a confined space, two permanent openings shall be provided. One near the top of the enclosure and one near the bottom. Each opening shall have a free area of not less than one square inch per 1000 BTU per hour (140 square inch per gph) of the total input rating of all the appliances in the enclosure. When the building is of unusually tight construction, has an air ventilating system, exhaust fans, process dryer or vented fireplaces, it is recommended that combustion air be supplied through two permanent openings. The openings shall communicate directly, or by means of ducts, with outdoors or such spaces (attic or crawl) that freely communicate with outdoors. Avoid linty environments. For additional venting information, refer to the regulations of the National Fire Protection Standard for oil burning equipment, ANSI/NFPA N0. 31-latest edition, or the cleaning equipment manufacturers recommendations.

NOZZLE AND AIR HANDLING PARTS SELECTION

IMPORTANT: Thorough combustion and performance testing was done to establish the correct nozzle type and air handling parts on this MSR-DC oil burner. Under circumstance attempt to replace or alter the oil burner nozzle type or air handling parts (stainless steel flamelock, air cone, electrode support style static disc, blower wheel or slotted air circumstances attempt to fire the MSR-DC oil burner under its 1.00 gph minimum or over its 2.75 gph maximum input rating.

To remove the gun assembly once the burner has been installed on the appliance remove the ignitor/housing cover screw and loosen the screw in the hold-down clip and swing open the transformer. Next, disconnect the copper oil line where it attaches with a 7/16" hex flare nut on the gun assembly oil line adapter fitting and remove the 9/16" hex gun assembly locknut. Now, grasp the rear of the gun assembly where the oil line fitting adapter exits through the housing and pull oil line fitting adapter to the right out of the housing slot and slot plate cover. Gently lift, do not force, the rear of the gun assembly, rotating the oil line fitting adapter up a 45 degrees pulling the entire gun assembly out of the air tube and housing opening.

The recommended can be installed into the nozzle body adapter using the following steps. With the gun assembly removed from the burner, loosen the electrode clamp screw and rotate the electrodes up, out of the way of a nozzle wrench. Now, thread the nozzle into the adapter finger tight then tighten securely with a nozzle wrench. **CAUTION:** Do not over tighten. Next, reposition the electrodes as shown in figure 1. At this time reinstall the gun assembly into the burner using the preceding steps in reverse order. Position the nozzle face forward to a 5/16" setting behind the stainless steel air cone as shown in figure 1. Once in the required position, replace the 9/16" hex lock nut and the 7/16" hex flare nut on the gun assembly and tighten the slot cover screw (see figure 2).

CAUTION: Close the ignitor and observe for spring contact with the brass buss bars, taking care not to pinch the ignition transformer lead wires between the housing and cover plate. Reinstall the ignitor/housing cover screw and tighten the screw in the hold down clip (see figure 2).

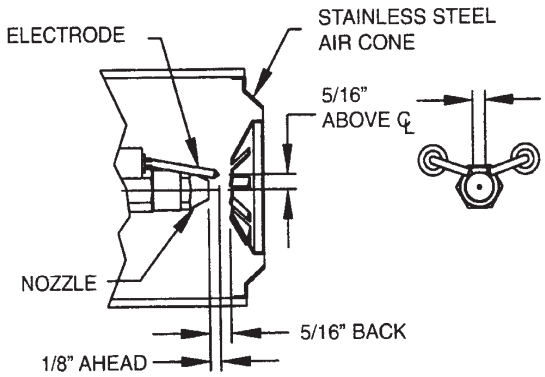

FIGURE 1

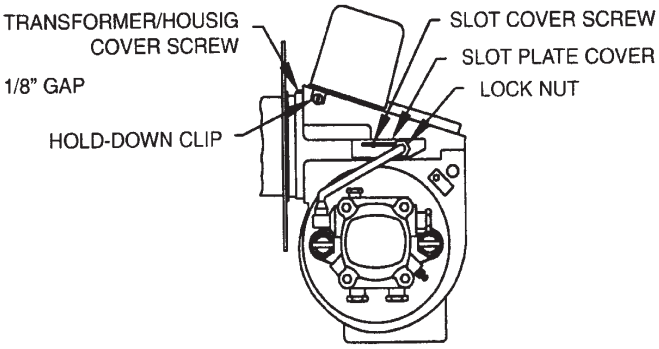

FIGURE 2

STARTING PROCEDURE

PREPARATION STEPS

1. Calibrate and check operation of combustion analysis equipment, CO_2 (carbon dioxide) or O_2 (oxygen) analyzer, smoke pump tester, fuel gas thermometer and oil pressure/vacuum gages. Follow the manufacture recommendation for proper calibration and check out.
2. Install oil pressure gage and vacuum gage in the outlet pressure and inlet ports of the fuel unit.
3. Set oil burner slotted air band shutter 25% open.

STARTING BURNER

1. Turn off the main power switch to the burner and appliance.
2. Be sure main fuel tank is filled and all manual valves are open between the fuel tank and the burner.
3. Turn on the main power switch to the burner and appliance.
4. Prime the fuel pump per its manufacturers recommendations, check fuel unit for 100 psi delivery pressure and check system vacuum (see paragraphs under Fuel Units and Oil Lines).

   CAUTION: Do not run fuel unit dry for more than five minutes or damage to the fuel unit could result.

5. Once the fuel unit is primed (no signs of air in oil bleeder port discharge), close the bleed port. Burner will ignite.
6. When flame is established, make a temporary air adjustment to the slotted air band for a visually clean combustion smoke observed from the appliance vent. Allow the appliance to warm up approximately five minutes or until the water temperature reaches that recommended by the cleaning equipment manufacture.
7. Adjust the slotted air band shutter until a #1 to #2 smoke (Shell Bacharach scale) is obtained at the appliance vent.
8. Check CO_2 (carbon dioxide) and/or O_2 (oxygen) percentages and smoke in the flue gas at the appliance vent. In general, CO_2 readings should be in the 10% to 12% range and O_2 readings in the 7.4% to 4.7% range.
9. Once the desired combustion results are attained, securely tighten slotted air band screw and check that controls on the appliance are adjusted per the cleaning equipment manufactures instruction sheets. Remove oil pressure and vacuum gages from the fuel unit and reinstall pipe plug fittings.
10. Check burner lighting with hot chamber, then allow burner and appliance to sufficiently cool. Then check burner lighting with a cold chamber.

SUGGESTION: all new installations should be reinspected after one or two weeks of normal operation.

MAINTENANCE

OILING MOTOR – The MSR_DC oil burner is provided with a ball bearing shaft motor. Ball-bearing motors do not require oiling under normal service conditions.

FILTER – The oil filter cartridge should be replaced, or sediment cleaned, periodically so the fuel oil will not become contaminated and plug up the fuel pump and nozzle of oil burner.

NOZZLE – The nozzle should be changed at least once each year or twice a year if the cleaning equipment is used daily through the year and should poor combustion occur. Replace with the proper nozzle.

COMPONENTS – If for any reason any of the burner parts have to be replaced, always use parts recommended by the manufacturer. Specify part numbers and description when ordering. (IN ALL COMMUNICATIONS STATE BURNER MODEL AND SIX DIGIT SPECIFICATION NUMBER).

ELECTRODE SETTINGS – This is very important for reliable ignition of the oil; check these once a year in accordance with the instructions provided in this manual. Replace electrodes if worn excessively or if porcelain insulator is oil soaked or cracked (See Figure 1).

FAN & BLOWER HOUSING – This must be kept clean, free of dirt and lint; open transformer to check fan blades from above. Be sure the electric power is off on burner when the transformer is opened up for this inspection. Should the blower wheel be removed for replacement or cleaning, reinstall as shown in figure 3.

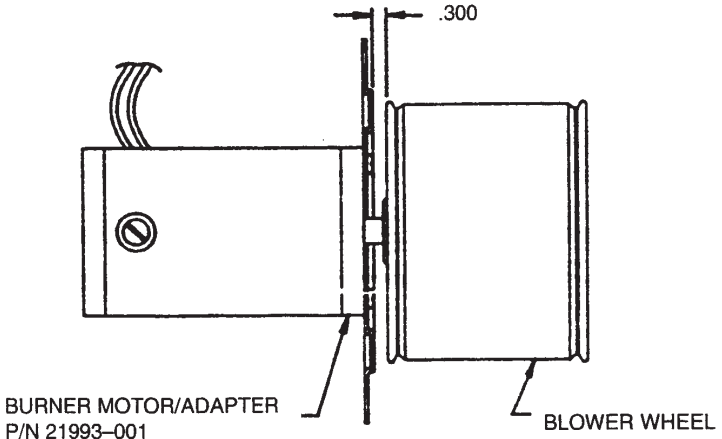

FIGURE 3

BURNER COMPONENTS - MODEL MSR-DC

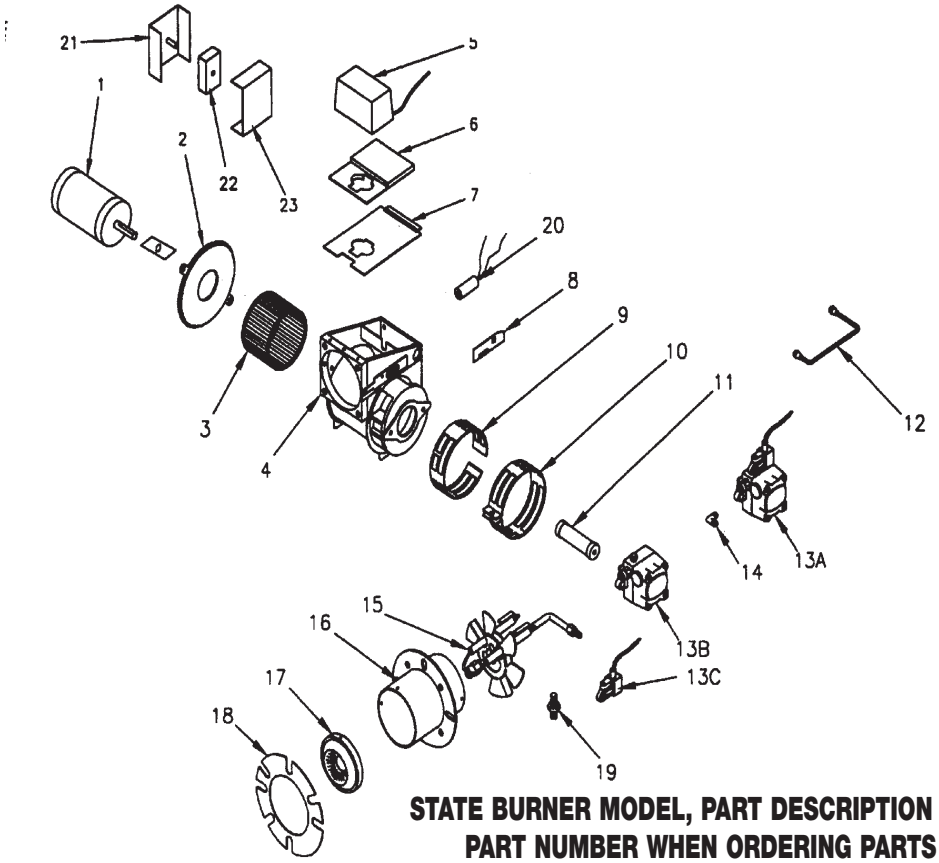

STATE BURNER MODEL, PART DESCRIPTION AND PART NUMBER WHEN ORDERING PARTS

AIR TUBE & GUN ASSEMBLY DETAILS MODEL MSR-DC

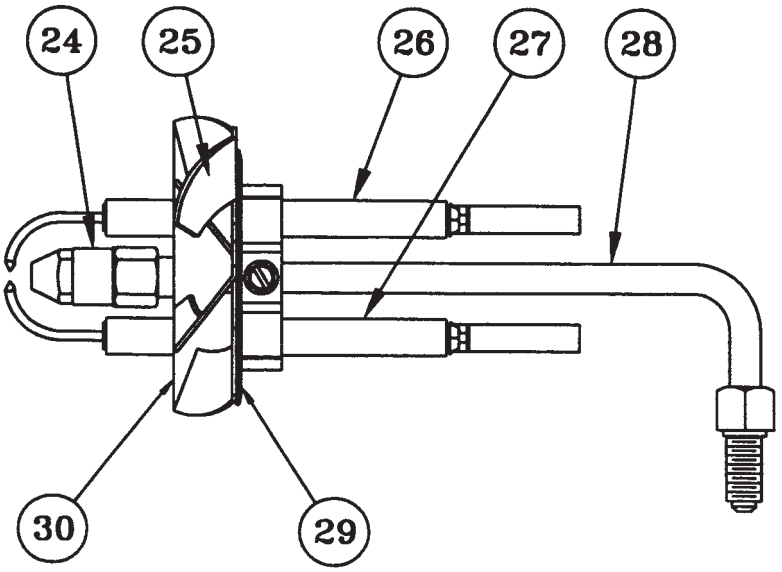

ITEM	QTY	PART #	DESCRIPTION
1	1	8046448-1	MOTOR 1/8 STANDARD
	1		MOTOR 1/8 LOW AMP
2	1	8046448-2	MOTOR ADAPTER
3	1	8046448-3	BLOWER WHEEL 3 1/2 X 4 1/4
4	1	8046448-4	BURNER HOUSING
5	1	8046448-5	IGNITOR - 12VDC
6	1	8046448-6	MOUNTING BASE
7	1	8046448-7	HOUSING COVER
8	1	8046448-8	SLOT COVER PLATE
9	1	8046448-9	INNER AIR BAND
10	1	8046448-10	OUTER AIR BAND
11	1	8046448-11	COUPLING
12	1	8046448-12	OIL LINE ASSEMBLY 6”
	1		OIL LINE ASSEMBLY 8”
13	1	8046448-13A	FUEL UNIT: SUNTEC COMBO
	1	8046448-13B	FUEL UNIT: SUNTEC
	1	8046448-13C	FUEL SOLENOID
14	1	8046448-14	ELBOW (USE WITH 13A)
15	1	8046448-15	GUN ASSEMBLY
16	1	8046448-16	AIR TUBE/FLANGE ASM
17	1	8046448-17	AIR CONE - #3A
	1		AIR CONE - #4A
18	1	8046448-18	GASKET
19	1	8046448-19	CONNECTOR (USE WITH 13B, 13C)
20	1	8046448-20	CAD CELL
21	1	8046448-21	CONTROL BOX
22	1	8046448-22	TIMER, DROP OUT
23	1	8046448-23	COVER, CONTROL BOX
24	1	8046448-24	ADAPTOR, NOZZLE SUPPORT
25	1	8046448-25	ELECTRODE SUPPORT ASM
26	1	8046448-26	ELECTRODE (RH)
27	1	8046448-27	ELECTRODE (LH)
28	1	8046448-28	OIL PIPE/FITTING
29	1	8046448-29	DISC/BAFFLE PLATE
30	1	8046448-30	CAST STABILIZER
	1		STAMPED STABILIZER

Suggested Combustion Chamber Dimensions Conversion or Upgrading Chamber Dimensions (In Inches)					
Firing Rate (G.H.P)	Square		Round	Height	Floor to Nozzle
	Width	Length			
0.85	8.5	8.5	8.5	8.5	8.5
1.00	9	9	10⅛	12½	5-6
1.25	10	10	11¼	12½	5-6
1.35	10½	10½	11¾	12¾	5-6
1.50	11	11	12⅜	13	5-6
1.65	11½	11½	13	13¼	5-6
2.00	12⅝	12⅝	14¼	13½	6-7
2.50	14¼	14¼	16	14	7-8
3.00	15½	15½	17½	15	7-8

TO DETERMINE THE AIR TUBE LENGTH

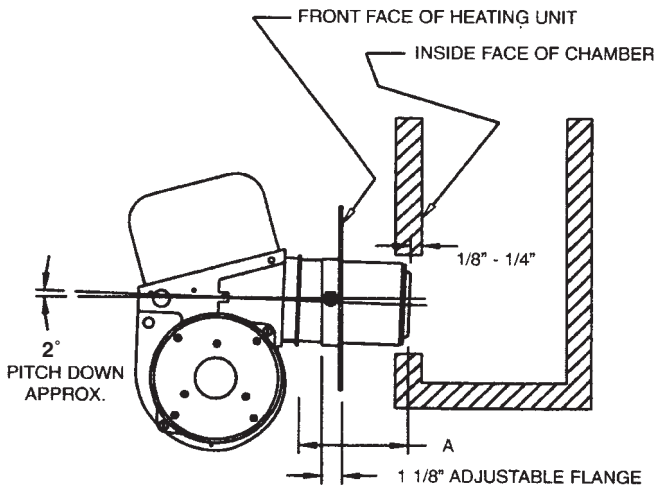

THE AIR TUBE LENGTH (DIM A) IS THE DISTANCE FROM THE FRONT OF AIR TUBE RETAINER FLANGE TO FACE OF AIR CONE. NOTE ADJUSTABLE FLANGE WIDTH.

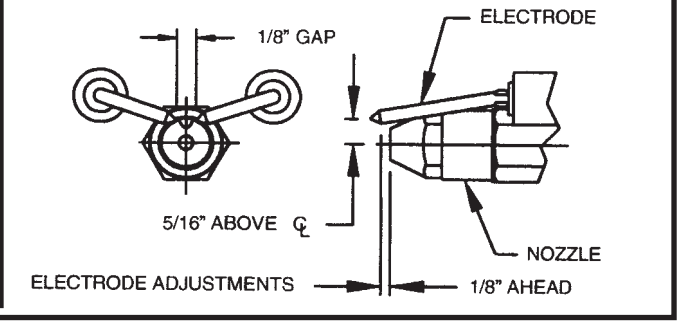

Notes

Notes

WAYNE COMBUSTION SYSTEMS
801 GLASGOW AVE.
FORT WAYNE, IN 48803

LIMITED WARRANTIES FOR OIL AND GAS BURNERS, MADE BY WAYNE AND USED IN RESIDENTIAL INSTALLATIONS

WAYNE COMBUSTION SYSTEMS ("WAYNE") warrants to those who purchase its **Oil Burner Models** for resale or for incorporation into a product of resale, that its burner is free from defects in material and workmanship under normal use and service for thirty-six (36) months from the date of manufacture. **ALL GAS BURNERS** manufactured by **"WAYNE"** will be similarly warranted for eighteen(18) months from date of manufacture except where original manufacture offers a greater warranty. (Reference #6 below) THESE LIMITED WARRANTIES DO NOT APPLY UNLESS THE BURNER COVERED BY IT **IS PROPERLY INSTALLED BY A QUALIFIED, COMPETENT TECHNICIAN**, WHO IS LICENSED WHERE STATE AND/OR LOCAL CODES PREVAIL, AND **WHO IS EXPERIENCED IN MAKING SUCH INSTALLATIONS**, IN ACCORDANCE WITH NFPA #31 OF THE NATIONAL FIRE PROTECTION ASSOCIATION AND IN ACCORDANCE WITH ALL LOCAL, STATE AND NATIONAL CODES.

Any **IN-WARRANTY** burner component which is defective in material or workmanship will be either repaired or replaced as follows:

1. Fuel units, motors, transformers, gas valves, and controls should be returned to an authorized service station or distributor of WAYNE for determination of applicability of this LIMITED WARRANTY as to either repair or replacement, where said service station or distributor is reasonably available in the customer's locality. The manufacturers of burner components regularly publish and distribute listings showing the locations of their network of service stations. Where such local service is NOT available for the burner components described above or other burner parts are involved, these items should be returned, freight prepaid, to WAYNE Service Department, 801 Glasgow Ave, Fort Wayne, Indiana 46803.
2. Burners and/or component(s) determined to be covered under this LIMITED WARRANTY by WAYNE shall be repaired or replaced at WAYNE's sole option.
3. WAYNE is not responsible for any labor cost for the removal and replacement of said burner or burner components and equipment associated therewith.
4. A burner so repaired will then carry the LIMITED WARRANTY equal to the unexpired portion of the original burner LIMITED WARRANTY.
5. If inspection by WAYNE does **NOT** disclose any defect covered by this LIMITED WARRANTY, the burner or burner component(s) will be either repaired or replaced at the expense of the customer and WAYNE's regular charges will apply.
6. If the original manufacturer of a burner component offers a warranty greater than either of our LIMITED WARRANTIES described above, then this portion will be added to our LIMITED WARRANTY.

This LIMITED WARRANTY does **NOT** cover products which have been damaged as the result of accident, abuse, misuse, neglect, improper installations, improper maintenance or failure to operate in accordance with WAYNE's written instructions.

These LIMITED WARRANTIES do not extend to anyone except the first purchaser at retail and only when the burner is in the original installation site.

IMPLIED WARRANTIES OF MERCHANTABILITY AND FITNESS FOR A PARTICULAR PURPOSE SHALL BE LIMITED TO THE DURATION OF THE LIMITED EXPRESS WARRANTIES CONTAINED HEREIN. WAYNE EXPRESSLY DISCLAIMS AND EXCLUDES ANY LIABILITY FOR CONSEQUENTIAL OR INCIDENTAL DAMAGES OF ANY NATURE FOR BREACH OF ANY EXPRESS OR IMPLIED WARRANTY.

Some states do not allow limitation on how long an implied warranty lasts, so the above limitation may not apply to you. Also, some states do not allow the exclusion or limitation of incidental or consequential damages, so the above limitation or exclusion may not apply to you. WAYNE neither assumes or authorizes any person to assume for WAYNE any other liability or obligation in connection with the sale of these products. This warranty gives you specific legal rights, and you may also have other rights which vary from state to state.

PAGE LEFT BLANK

WARRANTY
RETURN GOODS POLICY

LIMITED WARRANTY
The Manufacturer warrants its products to be free from defects in material and workmanship for a period of twelve months from the date of shipment from the factory. The Manufacturer shall not be responsible for any damage resulting to or caused by its products by reason of installation, improper storage, unauthorized service, alteration of the products, neglect or abuse, or use of the product in a manner inconsistent with its design. The warranty does not extend to any component parts not manufactured by Manufacturer; however, Manufacturer's warranty herein shall not limit any warranties made by manufacturers of component parts which extend to Buyer.

Claims for defects in material and workmanship shall be made in writing to Manufacturer within ten days of discovery of defect. Manufacturer may either send a service representative or have the product returned to its factory at Buyer's expense for inspection. Upon notification of defect, Manufacturer will issue a return goods authorization number to Buyer. The return goods authorization number must accompany the product returned. If judged by the Manufacturer to be defective in material or workmanship, the product will be replaced or repaired at the option of the Manufacturer, free from all charges except authorized transportation. Buyer shall be responsible for all maintenance services consisting of lubrication and cleaning of equipment, replacing expandable parts, making minor adjustments, and performing operating checks, all in accordance with procedures outlined in Manufacturer's maintenance literature.

THE FOREGOING WARRANTY IS IN LIEU OF ALL OTHER WARRANTIES AND NO REPRESENTATIONS, GUARANTEES, OR WARRANTIES, EXPRESS OR IMPLIED, (INCLUDING BUT NOT LIMITED TO A WARRANTY OF MERCHANTABILITY OR FITNESS FOR A PARTICULAR PURPOSE), ARE MADE BY THE MANUFACTURER IN CONNECTION WITH THE MANUFACTURE OR SALE OF ITS PRODUCTS. NO EMPLOYEE, DISTRIBUTOR, OR REPRESENTATIVE IS AUTHORIZED TO CHANGE THIS WARRANTY ON BEHALF OF MANUFACTURER.
THE REMEDIES OF BUYER SET FORTH HEREIN ARE EXCLUSIVE AND ARE IN LIEU OF ALL OTHER REMEDIES. THE LIABILITY OF MANUFACTURER WHETHER IN CONTRACT, TORT, UNDER ANY WARRANTY, OR
OTHERWISE SHALL NOT EXTEND BEYOND ITS OBLIGATION TO REPAIR OR REPLACE, AT ITS OPTION ANY PRODUCT OR PART FOUND BY MANUFACTURER TO BE DEFECTIVE IN MATERIAL OR WORKMANSHIP. MANUFACTURER SHALL NOT BE LIABLE FOR COST OF INSTALLATION AND/OR REMOVAL OR BE RESPONSIBLE FOR DIRECT, INDIRECT, SPECIAL OR CONSEQUENTIAL DAMAGES OF ANY NATURE.

GENERAL RETURNS OF MERCHANDISE

1. All returns must be pre-authorized
   A. Please call our parts department for an RGA number
   B. Please include RGA number on the outside of box
   C. Include any required paper work or special instructions
   D. Items returned without an RGA number will not be accepted
2. All returns are subject to a 20% restock charge.
3. Special items are non-returnable
   A. Non-stock parts
   B. Custom parts
   C. If you are unsure about a parts status when ordering, ask your McLaughlin representative if the item fits on of the above conditions.
4. Items must be returned within thirty days of original order date.
5. Items not returned within 30 days from the date of RGA is issued will not be accepted.
6. The item(s) must be in new condition. Used item(s) are not returnable.

Maintenance Record

DATE	SERVICE PERFORMED	BY

Notes