2006 Perimeter Road. Greenville, SC 29605
Toll Free: 800/435-9340 – Phone: 864/277-5870
Fax: 864/235-9661 – Website address: www.mclaughlinunderground
Email address: mmole@mightymole.com

PARTS MANUAL

VSK200-3000
E850620

SERIAL NUMBER – V2000227172419 TO PRESENT

7/27/2017

2017 by McLaughlin Group, Inc. Rev 1
All rights reserved. No part of this manual may be reproduced in any form, or by any means without prior written permission of McLaughlin Group, Inc.

Table of Contents

DECAL LAYOUT …… 7

SKID ASSEMBLY…… 14

REMOTE DRAIN ASSEMBLY…… 18

ANTIFREEZE ASSEMBLY…… 20

ENCLOSURE ASSEMBLY …… 22

CONTROL BOX ASSEMBLY…… 24

ENGINE ASSEMBLY …… 26

BLOWER ASSEMBLY…… 28

WATER PUMP ASSEMBLY…… 30

HYDRAULIC PUMP ASSEMBLY…… 32

TANK & DOOR ASSEMBLY…… 34

HYDRAULIC ARM ASSEMBLY…… 36

FILTRATION ASSEMBLY …… 38

WATER TANK ASSEMBLY…… 40

WATER REEL ASSEMBLY…… 44

VAC TOOLS ASSEMBLY…… 46

BOOM TURRET ASSEMBLY…… 48

BOOM PIVOT ARM ASSEMBLY…… 52

BOOM EXTENSION ARM ASSEMBLY…… 53

HOTBOX ASSEMBLY …… 54

SYSTEM OPERATIONS SPECIFICATIONS

Part	Part #	First 50 hrs	Every 500 hrs	AS REQUIRED
Engine Oil	10W30 ACEA E9	✓Daily		
Engine Coolant	40/60 mixture of PROPYLENE GLYCOL AND WATER (must meet ASTM D6210 specifications)	✓Daily		X
Oil Filter (John Deere)	8092260-05	✓Daily	X	
Fuel Filter (primary) (John Deere)	8092260-02	✓Daily	X	
Air Filter (element) (John Deere)	8092260-22	✓Daily		X
Fuel-Water Separator Filter	8092260-01	X		
Hydraulic Oil	Industrial Type Hydraulic Fluid	✓Daily		
Water Pump Oil	General Pump Series 100 Oil or SAE30, Non-Detergent, Motor oil	✓Daily		
Blower Oil	Industrial Type, Heavy Duty, Non-Detergent Motor Oil	✓Daily, X		

HYDRAULIC TEMPERTURE RANGE	**0-120°F (-18°-40°C) SAE 10 GRADE HYDRAULIC OIL or DEXTRON II ATF** **32-175°F (0-80°C) SAE 20 GRADE HYDRAULIC OIL** **3QTS (2.8L)**

BLOWER TEMPERTURE RANGE	**0°F (-1°C) AND UNDER**	**SAE 20**
	30-90°F (-1-32°C)	**SAE 30**
	90°F (32°C) AND ABOVE	**SAE 40**

******WATER PUMP – (Remove fill cap and fill crankcase to dot on oil gauge window.)**

******Refer to Component Manual specific Component Specifications.**

GREASE GUN LUBE POINTS

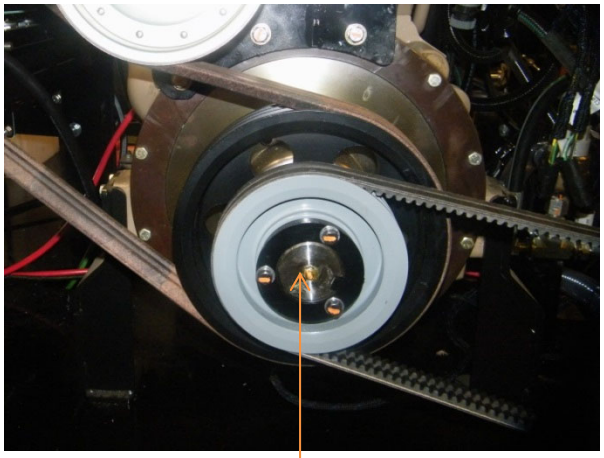

ENGINE GREASE POINT

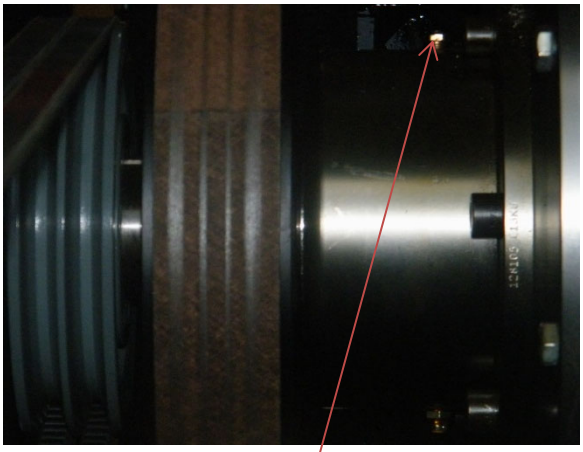

ENGINE HUB GREASE POINT

TANK PIVOT TUBE GREASE POINT

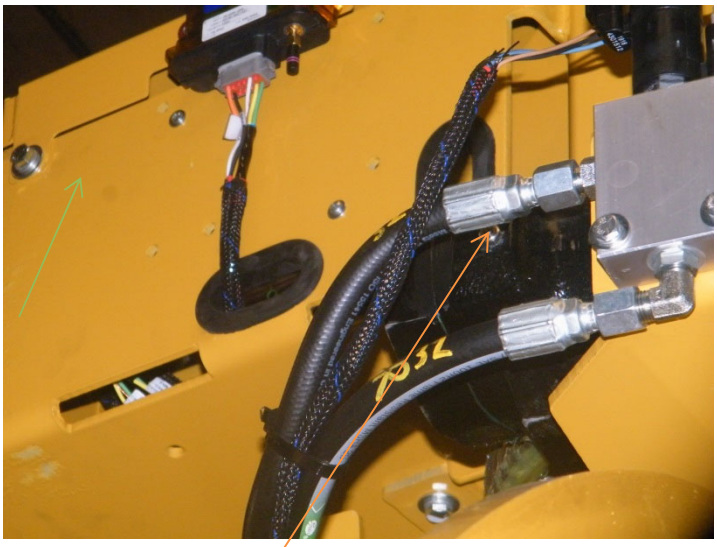

BOOM GREASE POINT

J200445

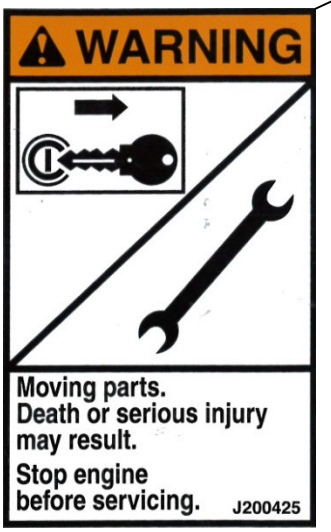

J200425

J200430

J200210

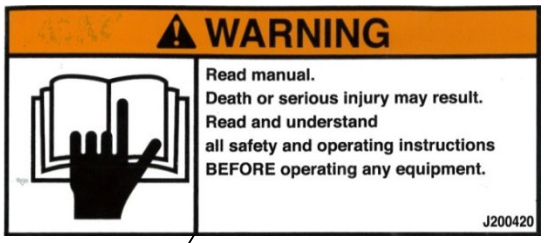

J200420

J200435

J200445

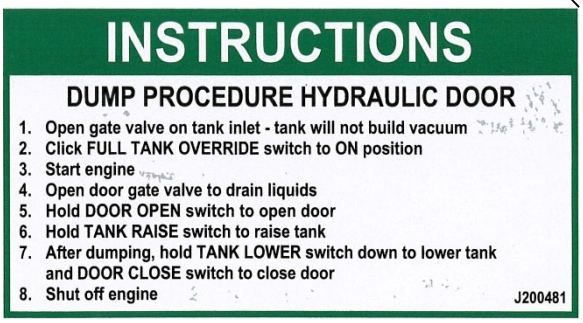

J200481

J200425

J200450

J200440

J200411

J200403

DECAL LAYOUT

J200473

J200481

J200423

J200410

J200455

J200415

J200458

PAGE LEFT BLANK

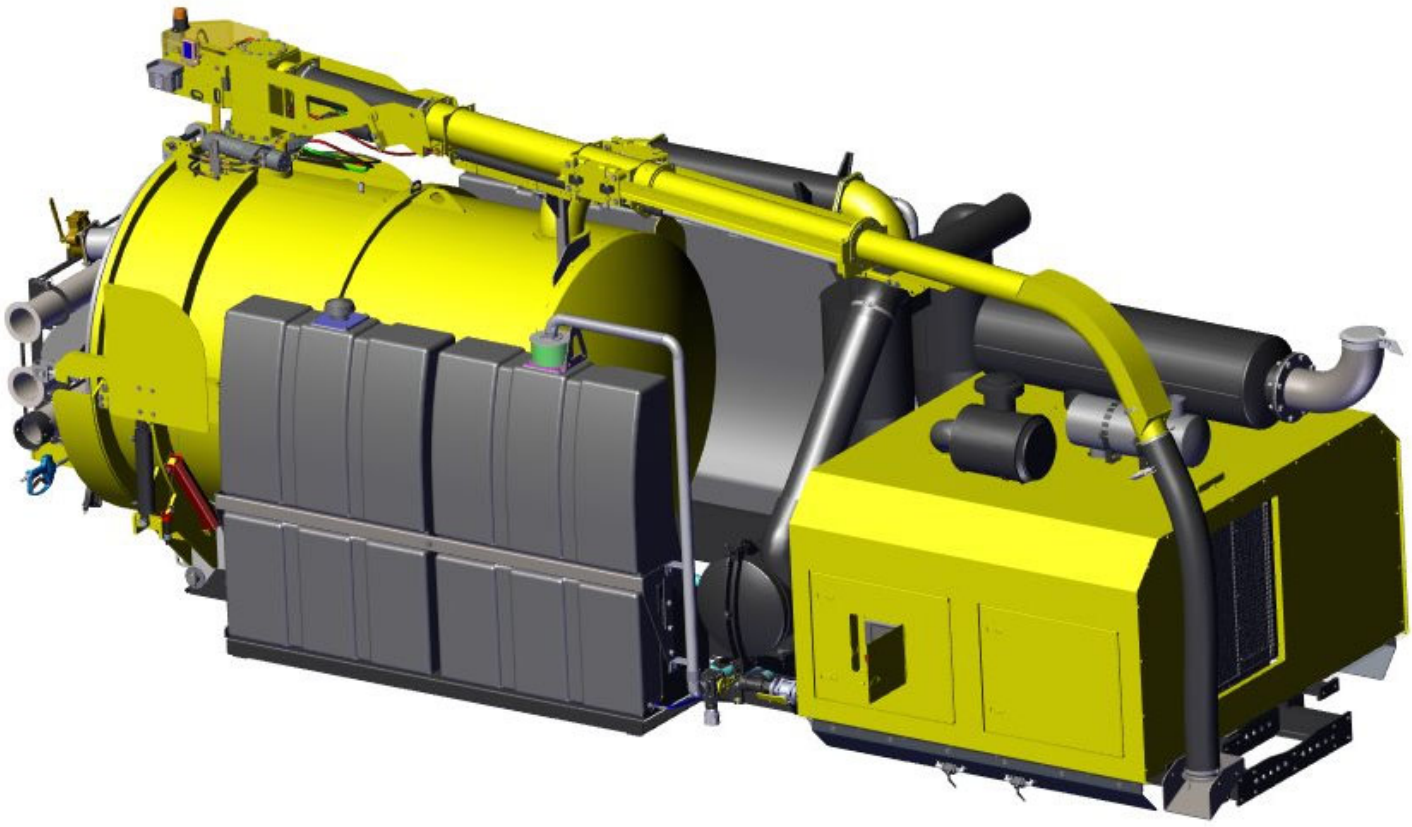

PAGE LEFT BLANK

VX200 SPOIL TANK SKID ASSEMBLY

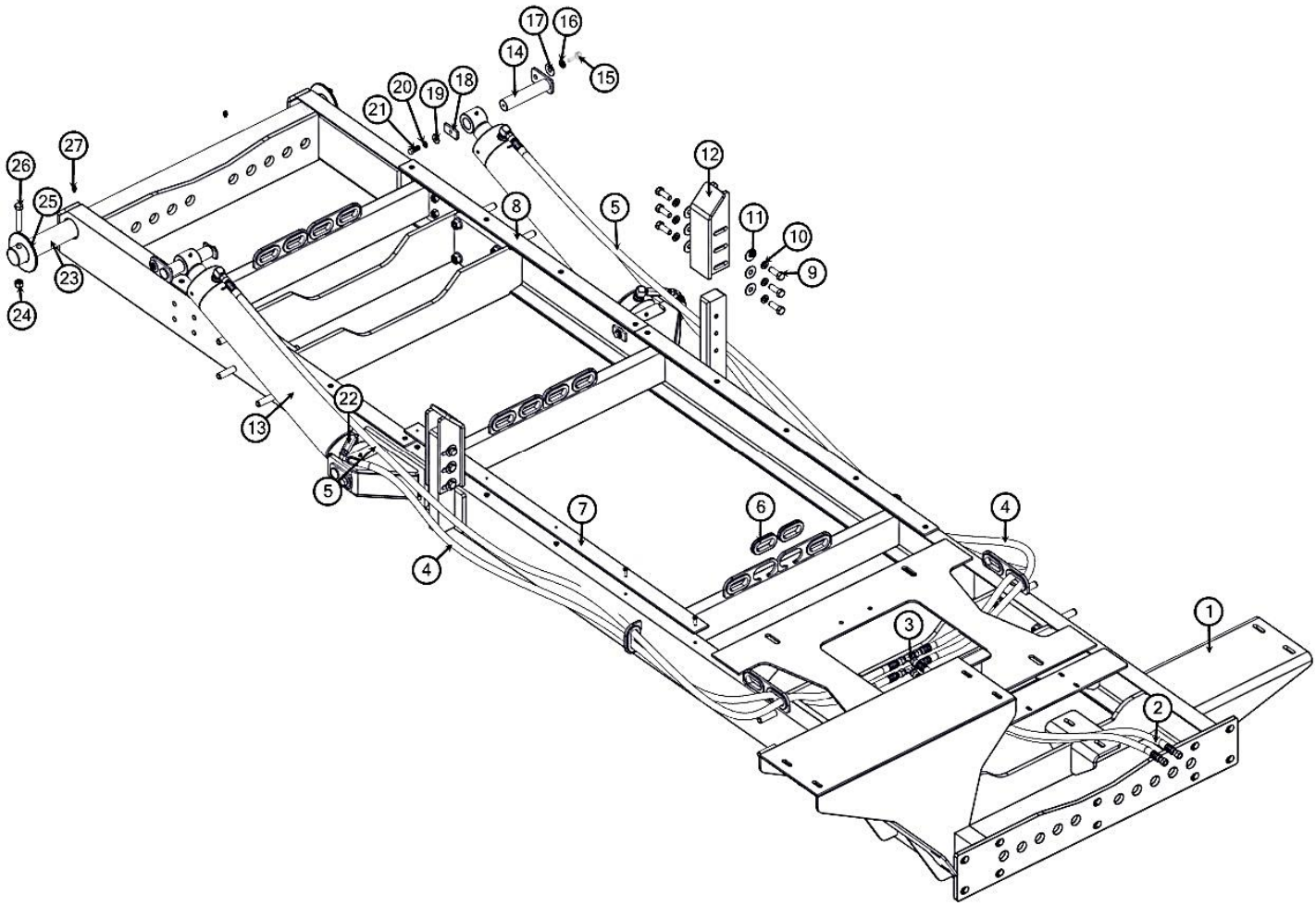

VX200 SPOIL TANK SKID ASSEMBLY

BOM ID	Qty	Name	
1	1	8092682	WELDMENT, SKID (SPOIL) VX200
2	2	8045871	HOSE ASSY VAC 6-40" ST-ST
3	2	T402154	TEE, 6MJ-6MJ-6MJ
4	2	8046819	HOSE ASSY VAC 6-79" ST-90
5	2	8093486	HOSE ASSY VAC 6-110" ST-ST
6	18	8042812	GROMMET, 2"ID X 3"OD X 1/4"WOG
7	2	8093839	STRIP, PLASTIC SKID/TANK
8	2	8093840	STRIP, PLASTIC SKID/TANK 2
9	12	U000840	SCREW, HC .500-13 X 1.50 ZP G5
10	12	U210100	WASHER, LOCK .500 ZP
11	12	U200100	WASHER, FLAT .500 ZP
12	2	8092998	TANK GUIDE HEAVY WELDMENT
13	2	8044825	CYLINDER, HYD 4" X 20"
14	4	8094489	WELDMENT, TANK PIVOT PIN
15	4	U000820	SCREW, HC .500-13 X 1.25 ZP G5
16	4	U210100	WASHER, LOCK .500 ZP
17	4	U200100	WASHER, FLAT .500 ZP
18	4	8091173	PIN RETENTION PLATE
19	4	U200060	WASHER, FLAT .375 ZP
20	4	U210060	WASHER, LOCK .375 ZP
21	4	U000420	SCREW, HC .375-16 X 1.00 ZP G5
22	2	8048286	VALVE CHECK VELOCITY 6.0GPM
23	1	8092765	ROD, TANK PIVOT
24	2	U160018	NUT, LOCK .500-13 NY ZP
25	2	U200180	WASHER, FLAT 2.125"ID X 4.50"OD
26	2	U000930	SCREW, HC .500-13 X 3.00 ZP G5
27	2	T500030	FITTING, GREASE .125 NPT STR

*NOT SHOWN
1 X200203 HARNESS, FRAME

VX200 POWERPACK SKID ASSEMBLY

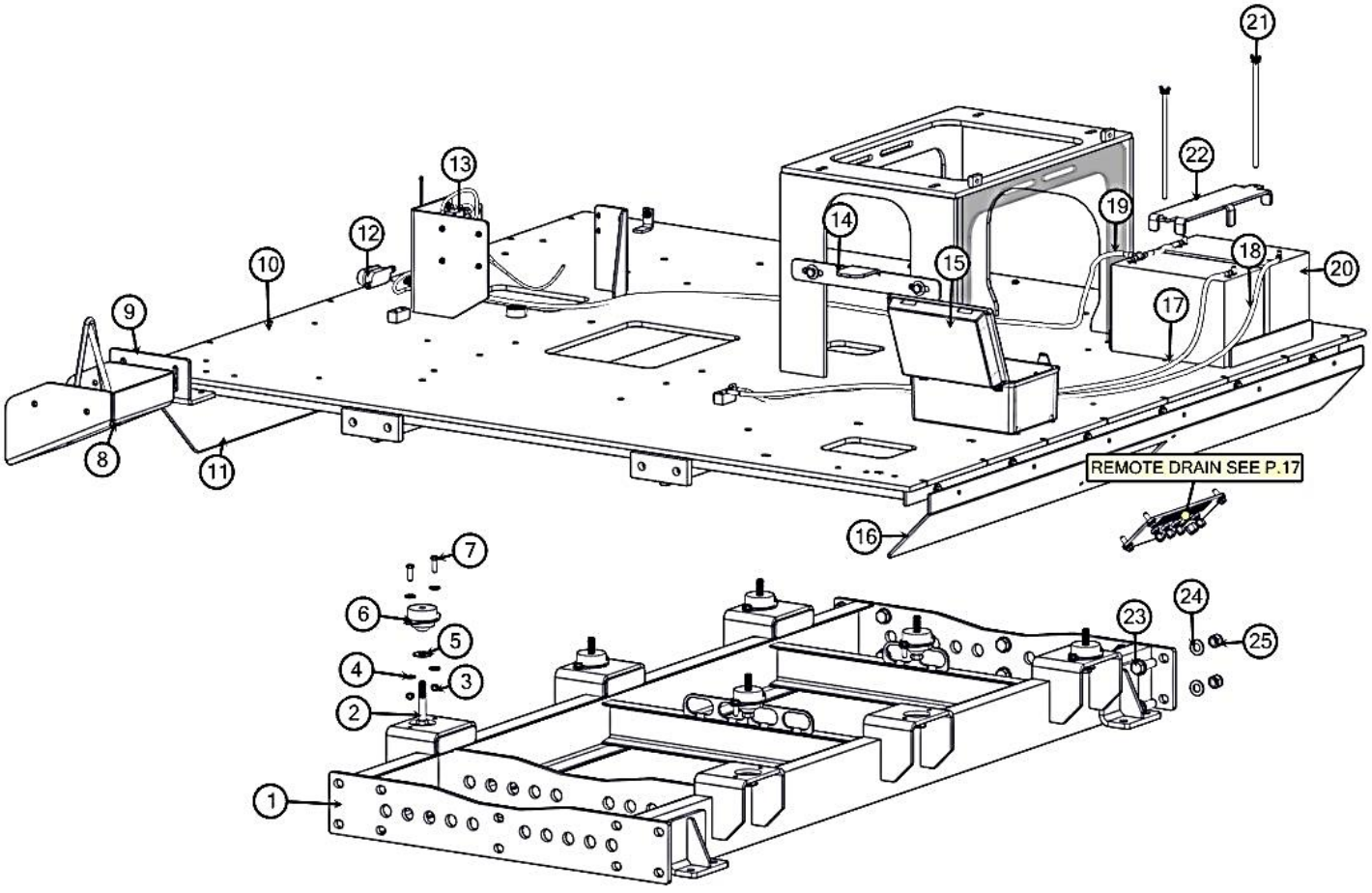

VX200 POWERPACK SKID ASSEMBLY

BOM ID	Qty	Name	
1	1	8091957	SKID, POWERPACK VSK200
2	6	U001300	SCREW, HC .625-11 X 3.75 ZP G5
3	12	U120110	NUT, LOCK .375-16 NY ZP
4	24	U200060	WASHER, FLAT .375 ZP
5	12	U200140	WASHER, FLAT .625 ZP
6	6	8094547	ISOLATOR, 1200 LBS
7	12	U000440	SCREW, HC .375-16 X 1.25 ZP G5
8	1	8094634	HOSE STORAGE TRAY WELDMENT
9	1	8094630	HOSE STORAGE MOUNT BRACKET
10	1	8092201	MAIN PLATE WELDMENT VX200
11	1	8091965	ENCLOSURE SKIRT VX200
12	1	8043800	FUSE HOLDER AMG
13	1	X000030	RELAY, POWER SPST 75A DUAL CONT
14	1	8094280	MOUNT, PIPE 6"
15	1	8094271	TOOL BOX, ENCLOSURE
16	1	8092832	SKIRT DRAIN PANEL WELDMENT
17	1	X300341	CABLE, BATTERY GND 1GA 62" 3/8"-3/8"
18	1	X300340	CABLE, BATTERY GND 1GA 70" 3/8"-3/8"
19	1	X300345	CABLE, BATTERY HOT 1GA 95" 3/8"-3/8"
20	2	X400050	BATTERY, 31-MHD WORKAHOLIC
21	2	8043742	BATTERY ROD HOLD DOWN VK
22	1	8092857	DUAL BATTERY HOLD DOWN PLATE
23	10	U001425	SCREW, HC .750-10 X 2.50 ZP G8
24	20	U200165	WASHER, FLAT .750 ZP SAE HARD
25	10	U120041	NUT, LOCK NY .750-10 ZP G8

VX200 REMOTE DRAIN ASSEMBLY

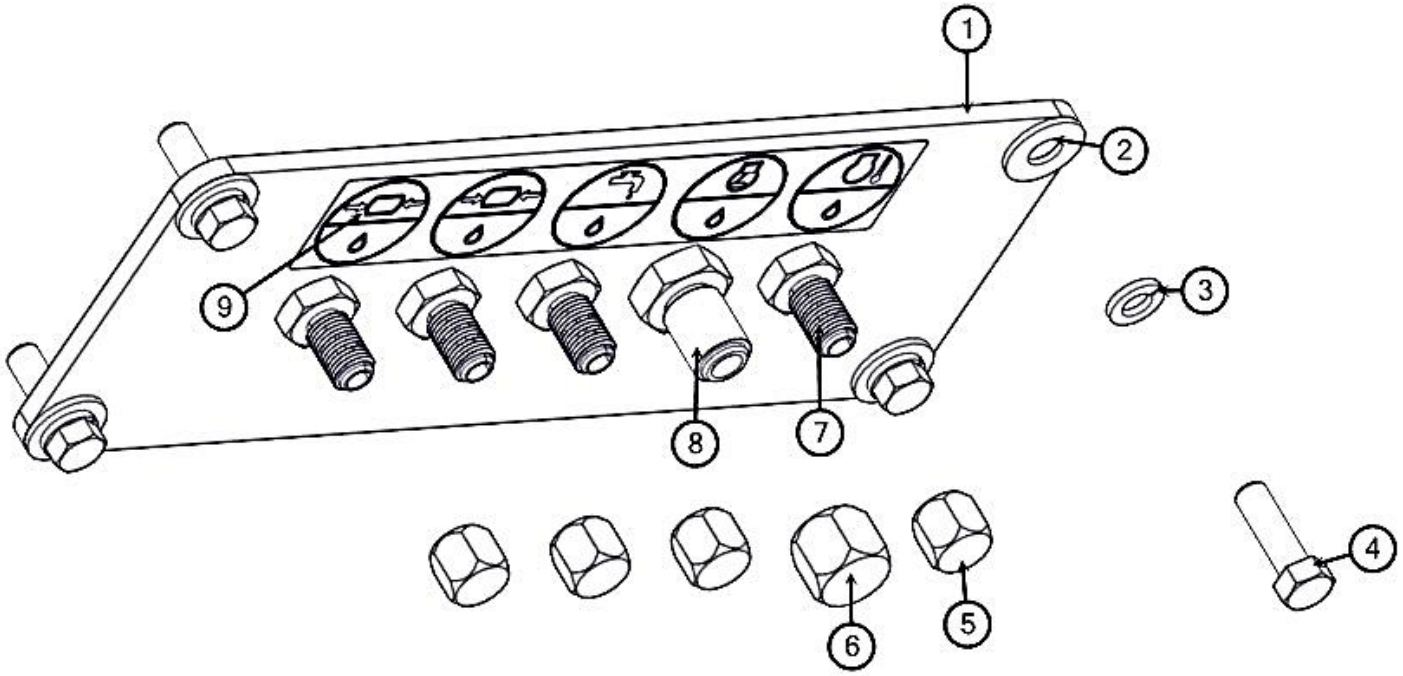

VX200 REMOTE DRAIN ASSEMBLY

BOM ID	Qty	Name	
1	1	8092829	DRAIN PLATE VX200
2	4	U200060	WASHER, FLAT .375 ZP
3	4	U210060	WASHER, LOCK .375 ZP
4	4	U000440	SCREW, HC .375-16 X 1.25 ZP G5
5	4	T405203	CAP, 3/8"FJIC HEX HEAD
6	1	T405205	CAP, 1/2"FJIC HEX HEAD
7	4	T400391	BULKHEAD 6MJ_6MJ
8	1	T400387	BULKHEAD 8MJ_8MJ
9	1	J200032	DECAL, REMOTE DRAIN

VX200 ANTIFREEZE ASSEMBLY

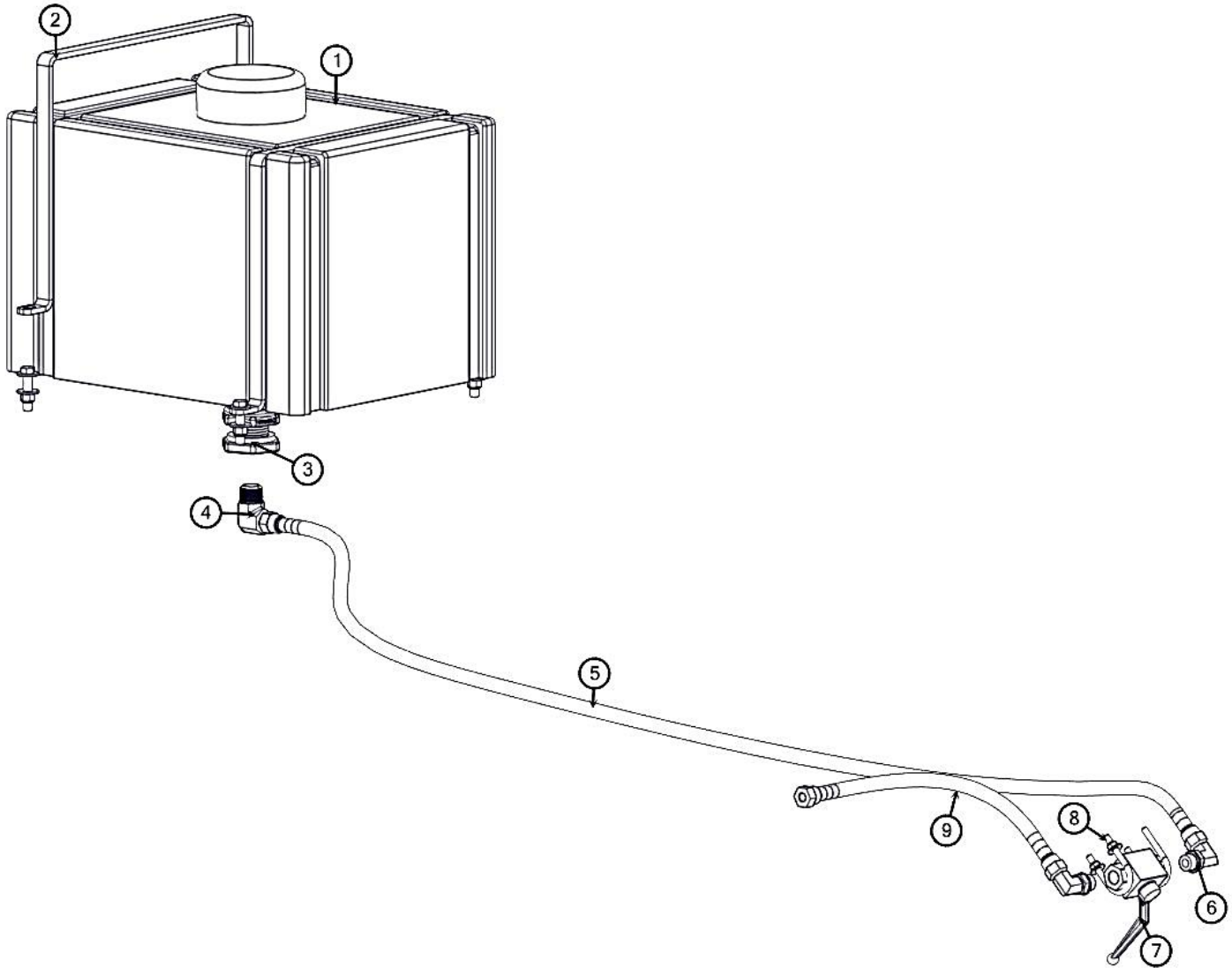

VX200 ANTIFREEZE ASSEMBLY

BOM ID	Qty	Name	
1	1	8048810	TANK, ANTIFREEZE 12GAL W/CAP
2	2	8094267	HOLD DOWN PLATE (ANTIFREEZE)
3	1	8041148	BULKHEAD 3/4"NPT PLASTIC
4	1	T401160	ELBOW, 90 12MP-8MJ
5	1	8046803	HOSE VAC PUSH 8-79"LG
6	2	T401280	ELBOW, 90 8MB(ADJ) - 8MJ
7	1	8031197	VALVE, BALL 1/2" 3000 PSI.MIN
8	2	U010017	U-BOLT .250-20
9	1	8090212	HOSE VAC PUSH 8-24"LG

VX200 ENCLOSURE ASSEMBLY

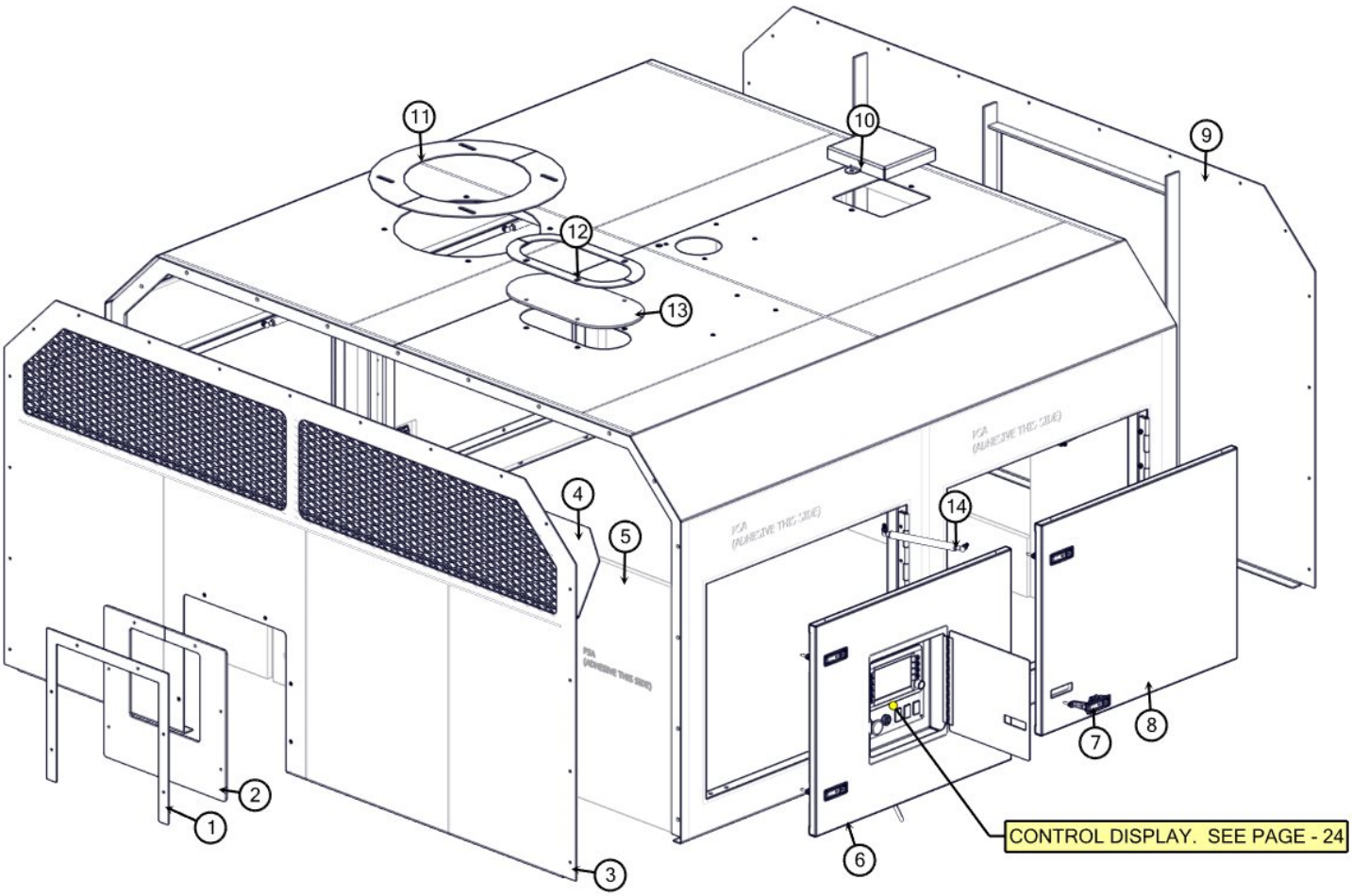

VX200 ENCLOSURE ASSEMBLY

BOM ID	Qty	Name	
1	1	8093100	BLOWER AG SEAL PLATE
2	1	8093760	SEAL, BLOWER AG HOSE
3	1	8092445	ENCLOSURE REAR PANEL WELDMENT
4	1	8092198	SOUND DIFFUSER
5	1	8092594	SOUND INSULATION VX200
7	8	8092725	LATCH, KEY LOCKING
8	3	8093086	ENCLOSURE DOOR
9	1	8092446	ENCLOSURE FRONT PANEL WELDMENT
10	1	8092481	ENCLOSURE COVER (RADIATOR ACCESS)
11	2	8092479	ADJUSTABLE FLANGE
12	2	8093293	AIR FILTER PIPE PLATE
13	1	8092801	SEAL, RUBBER
14	4	8093730	SPRING, GAS W/BALL-JOINT FITTINGS

VX200 CONTROL BOX ASSEMBLY

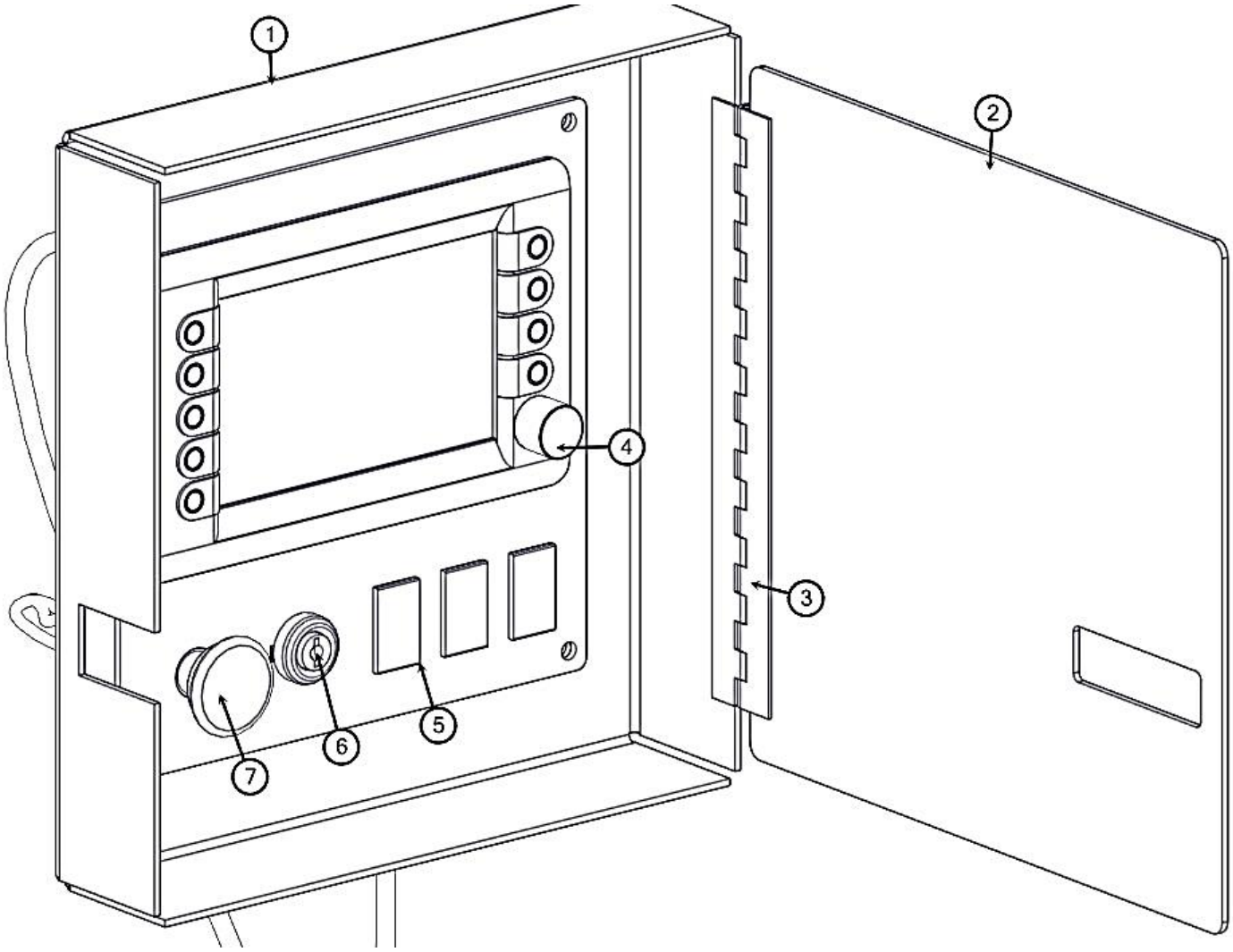

VX200 CONTROL BOX ASSEMBLY

BOM ID	Qty	Name	
1	1	8092696	CONTROL BOX
2	1	8092700	DOOR, CONTROL BOX
3	1	8092723	HINGE, CONTROL BOX
4	1	8092954	DISPLAY, 7" IFM COLOR
5	3	X000290	PLUG, ROCKER HOLE
6	1	8030458	SWITCH, IGNITION 3000PP
7	1	X000280	EMERGENCY STOP

VX200 ENGINE ASSEMBLY

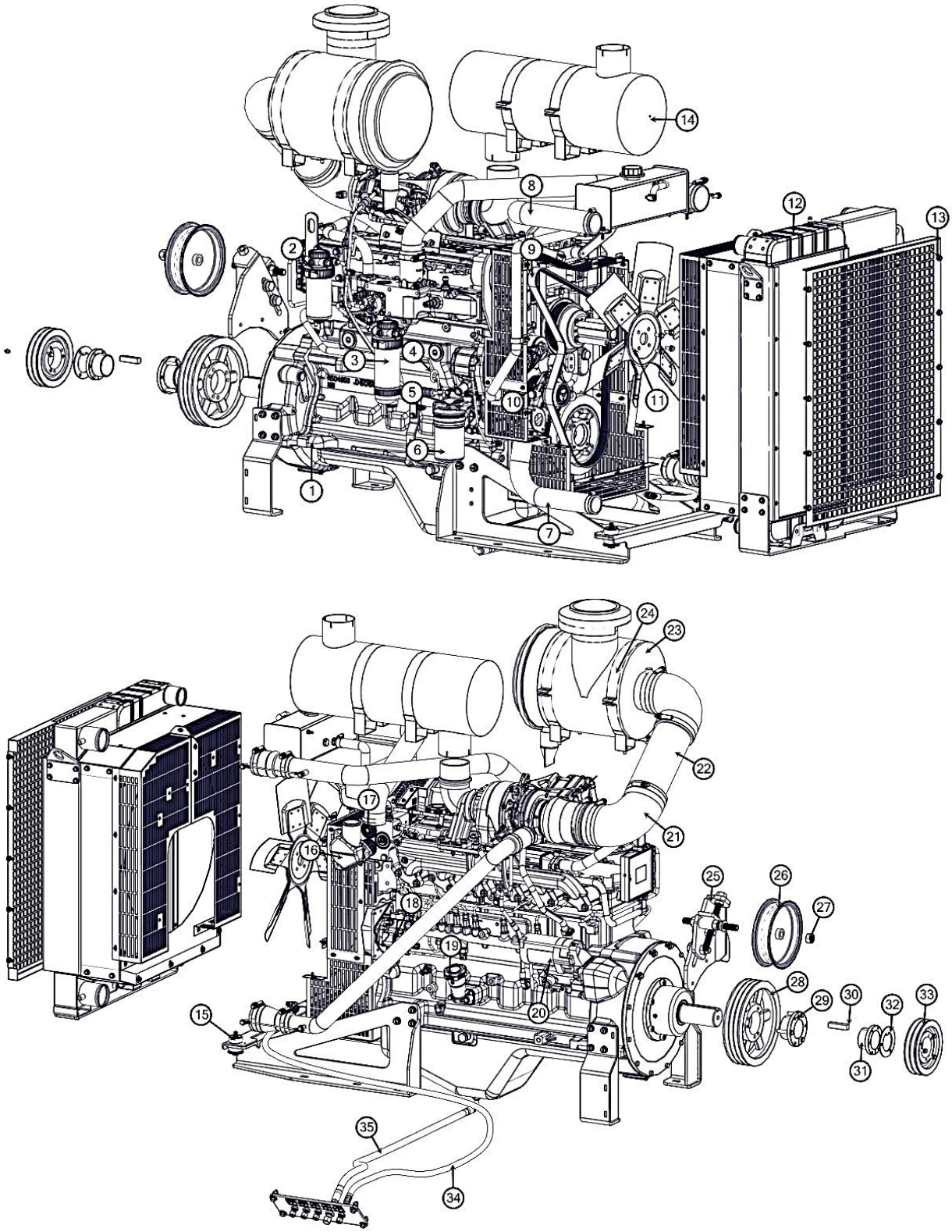

VX200 ENGINE ASSEMBLY

BOM ID	Qty	Name
1	1	8092260 ENGINE, DEERE 200HP PWR UNIT
2	1	8092260-01 FILTER, FUEL WATER SEPARATOR
3	1	8092260-02 FILTER, FUEL
4	1	8092260-03 DIPSTICK, OIL
5	1	8092260-04 HEADER, OIL FILTER
6	1	8092260-05 FILTER, OIL
7	1	8092260-06 HOSE, RADIATOR LOWER
8	1	8092260-11 HOSE, RADIATOR UPPER
9	1	8092260-08 BELT, FAN
10	1	8092260-07 PUMP, WATER
11	1	8092260-09 FAN
12	1	8092260-10 RADIATOR
13	1	8092260-23 GUARD, RADIATOR
14	1	8092260-12 MUFFLER
15	2	8092260-17 MOUNT, RADIATOR
16	1	8092260-13 COVER, THERMOSTAT
17	1	8092260-14 ASSEMBLY, THERMOSTAT
18	1	8092260-15 PUMP, FUEL
19	1	8092260-16 CAP, OIL FILL
20	1	8092260-18 STARTER
21	1	8092260-19 ELBOW, AIR CLEANER ASSEMBLY
22	1	8092260-20 STRAIGHT, AIR CLEANER ASSEMBLY
23	1	8092260-21 AIR FILTER OUTER
24	1	8092260-22 ELEMENT, AIR FILTER
25	1	8094543 WELDMENT, PULLEY TENSIONER STATIONARY
26	1	8093169 PULLEY, 9" TENSIONER MOUNT
27	1	U100200 NUT,HEX .750-10 ZP G5
28	1	8093954 SHEAVE, 3-5VX1130
29	1	8093955 BUSHING, SF 2 1/2"
30	1	8093955-01 KEY, BUSHING 5/8" - 3/16"
31	1	8094122 BUSHING, SK 2 1/2"
32	1	8094136 RETAINER, 2.5" SHAFT
33	1	8093956 SHEAVE, 2BX0700
34	1	8041452 HOSE ASSY VAC 6-70" ST-90
35	1	8041490 HOSE ASSY VAC 6-52" ST-90

* NOT SHOWN:
ASSEMBLY, ENGINE BAY HARNESS VX200 - X200202

VX200 BLOWER ASSEMBLY

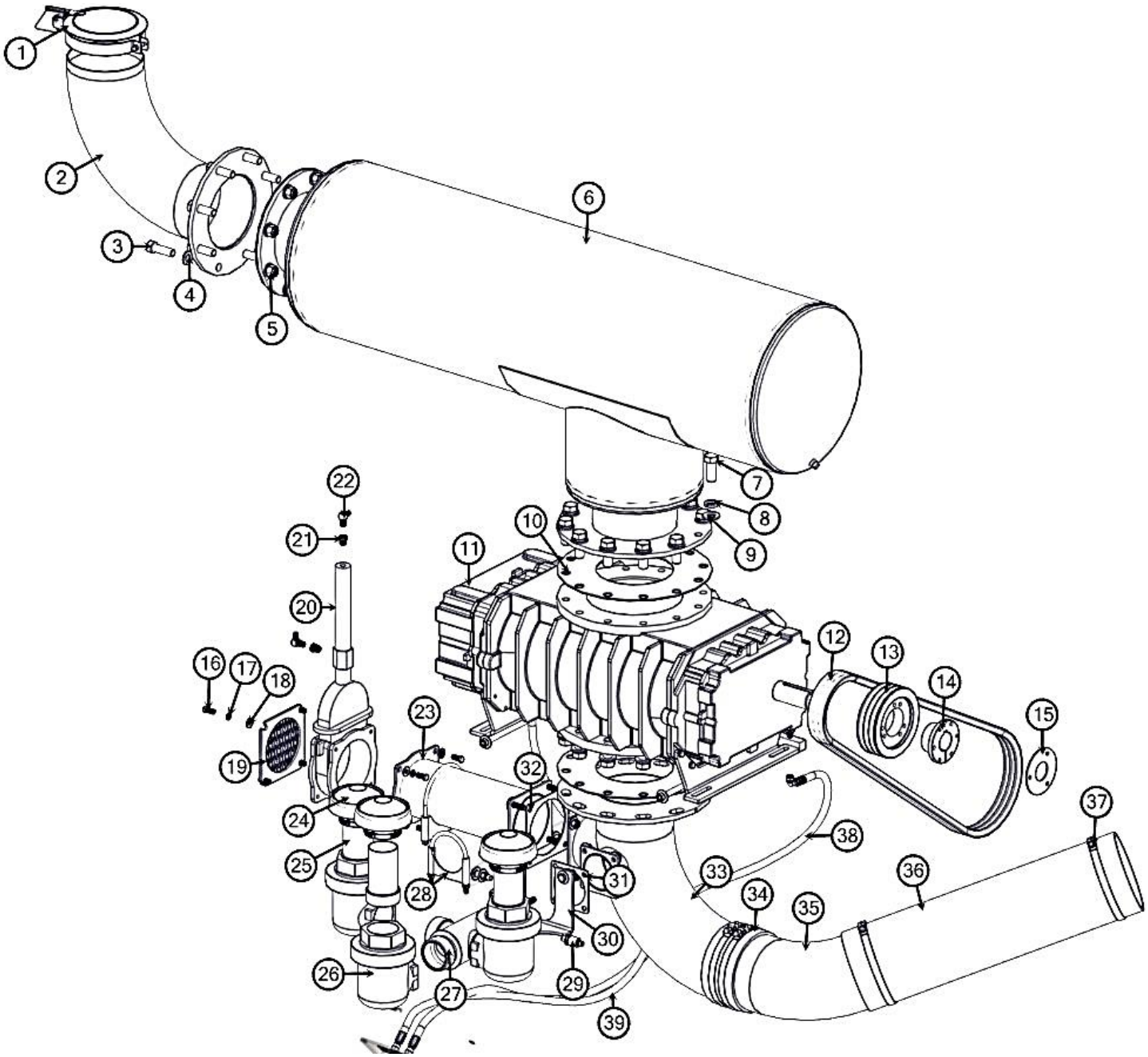

VX200 BLOWER ASSEMBLY

BOM ID	Qty	Name
1	1	8094195 RAIN CAP, 8" SILENT
2	1	8092519 SILENCER OUTLET WELDMENT
3	8	U001420 SCREW, HC .750-10 X 2.50 ZP G5
4	16	U200160 WASHER, FLAT .750 ZP
5	8	U120040 NUT, LOCK NY .750-10 ZP G2
6	1	8092091 SILENCER, AIR 10" IN - 8" OUT
7	24	U001551 SCREW, HC .875-9 X 2.25 ZP G5
8	24	U210180 WASHER, LOCK .875 ZP
9	24	U200168 WASHER, FLAT .875 ZP SAE HARD
10	2	8092811 GASKET, BLOWER FLANGE
11	1	8092099 BLOWER, RAM 624 3200CFM
12	1	8093952 BELT, 3-5VP870 BANDED
13	1	8093950 SHEAVE, 3-5VX0750 SF
14	1	8093951 BUSHING, SF 2
15	1	8092817 RETAINER, 2" BUSHING (3 HOLE)
16	8	U000420 SCREW, HC .375-16 X 1.00 ZP G5
17	8	U210060 WASHER, LOCK .375 ZP
18	8	U200060 WASHER, FLAT .375 ZP
19	1	8049371 BOTTOM PLATE WELDMENT 6" VALVE
20	1	8043577 VALVE, GATE 6" W/HYD. CYLINDER DBL ACT
21	2	T400023 REDUCER 6MP_4FP
22	2	T401100 ELBOW 90 4MP_4MJ
23	1	8091659 WELDMENT, 6" PIPE EXTENSION
24	3	8091506-01 CAP, AIR IN-TAKE 3"ID
25	3	8045238 UNION EXHAUST 3" OD-MNPT
26	3	8092079 VALVE, 3" AIR RELIEF SET 18"HG
27	1	8092573 VAC RELIEF WELDMENT
28	1	8031193 CLAMP, U-BOLT 4" EXHAUST
29	1	X000085 PRESSURE TRANSDUCER
30	1	8092307 PIPE MOUNT 4"
31	1	8092812 GASKET, 4" PIPE
32	1	8092813 GASKET, 6" PIPE
33	1	8092319 INTAKE WELDMENT
34	1	8092966-004.00 TUBE, TEX-AQUA-HD 8" X 4"LG
35	1	8094401 ELBOW, 45 8"OD X 4"LEG
36	1	8092966-030.00 TUBE, TEX-AQUA-HD 8" X 30"LG
37	4	8092896 CLAMP, T-BOLT 8" HOSE
38	1	8049140 HOSE ASSY VAC 6-85" ST-90
39	1	8047171 HOSE ASSY VAC 6-96" ST-ST

VX200 WATER PUMP TSF2421 ASSEMBLY

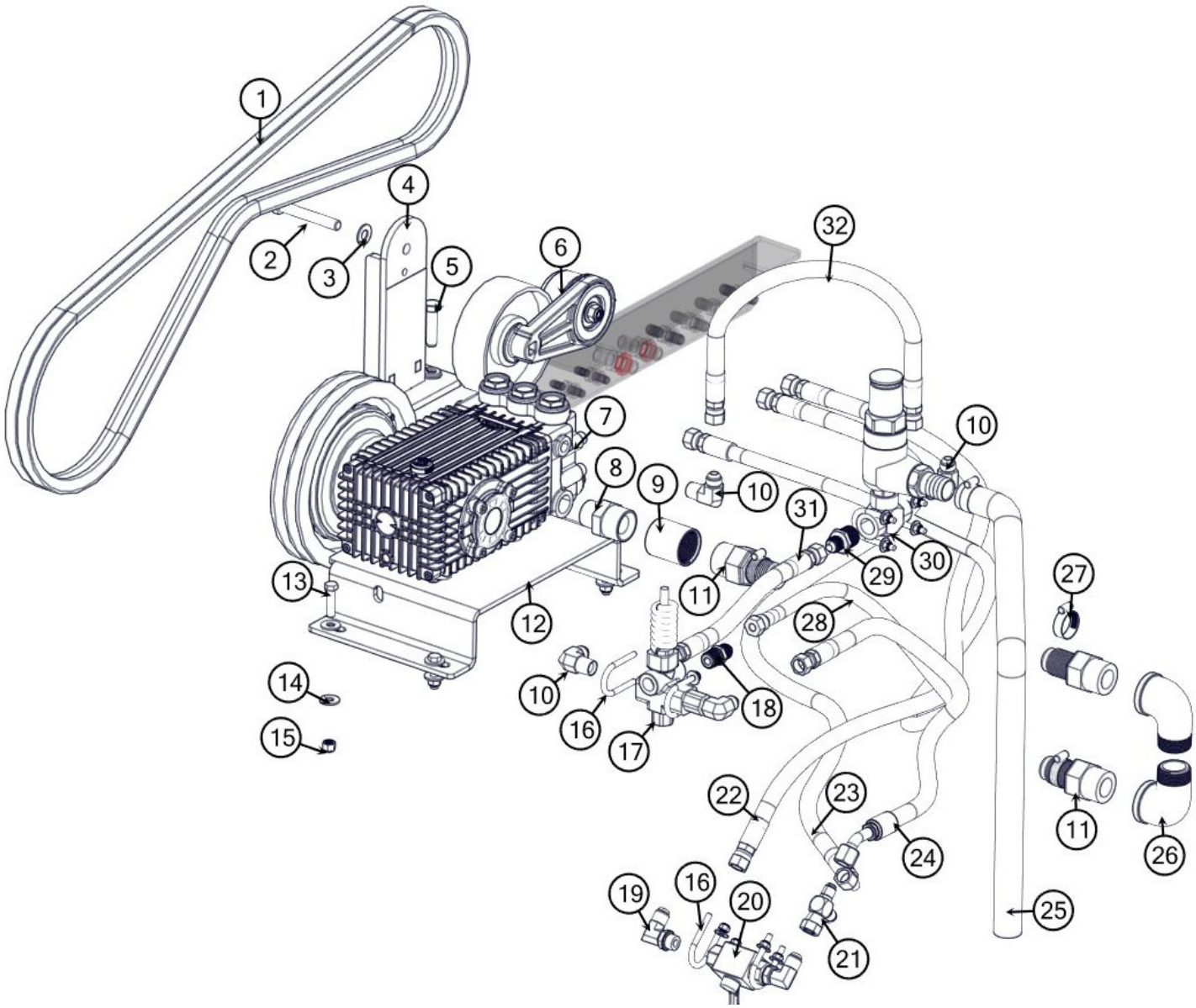

VX200 WATER PUMP TSF2421 ASSEMBLY

BOM ID	Qty	Name	
1	2	8097114	BELT, BP83 PREDATOR GATES ONLY
2	1	U001655	SCREW, HC 12MM X 1.75 X 90MM G8.8
3	4	U200110	WASHER FLAT .500 ZP SAE HARD
4	1	8097112	WELDMENT, AUTO TENSIONER, ECO200
5	2	U000880	SCREW, HC 1/2-13 X 2.00 ZP G5
6	1	8096205	AUTO TENSIONER FLAT FACED PULLEY
7	1	8093712	PUMP, WATER TSF2421 W/CLUTCH
8	1	T400618	REDUCER, 1"MP-1-1/4"MP
9	1	T422080	COUPLING PIPE 1 1/4" STEEL
10	4	T401140	FITTING, ELBOW 90°, 8MP-8MJ 90°
11	3	8041312	FITTING, 1-1/4"MP-1-1/4"HB
12	1	8093520	PUMP BRACKET TSF2421
13	4	U000460	SCREW, HC .375-16 X 1.50 ZP G5
14	12	U200060	WASHER, 3/8" USS FLAT ZP
15	4	U110060	NUT, ST .375-16 ZP G2
16	6	U010017	U-BOLT, .250-20 X .75
17	1	8030341	VALVE, UNLOADER, GREEN SPRING
18	1	T400040	UNION, 8MP - 8MJ
19	2	T401280	ELBOW, 90 8MB-8MJ
20	1	8031197	VALVE, BALL 1/2" 3000 PSI
21	1	T402155	TEE 8FJ_8MJ_8MJ
22	1	8041489	HOSE ASSY VAC 8-60" ST-ST
23	1	8043055	HOSE ASSY VAC 8-60" ST-45
24	1	8094059	HOSE ASSY VAC 8-23.5" ST-90
25	1	8042941	HOSE VAC CLEAR VINYL 1-1/4-27
26	2	8041311	ELBOW, 90 1.25 STREET EL GALVAN
27	3	8040677	CLAMP, HOSE 1 1/4 - 2 1/8 HD
28	1	8041489	HOSE ASSY VAC 8-60" ST-ST
29	1	T400080	REDUCER, 3/4"MP-1/2"MJ (12MP-8MJ)
30	1	T402160	TEE 12FP_12FP_12FP
31	1	8042934	HOSE ASSY VAC 4-12" ST-ST
32	1	8044749	HOSE ASSY VAC 4-23.5" ST-90

VX200 HYDRAULIC PUMP ASSEMBLY

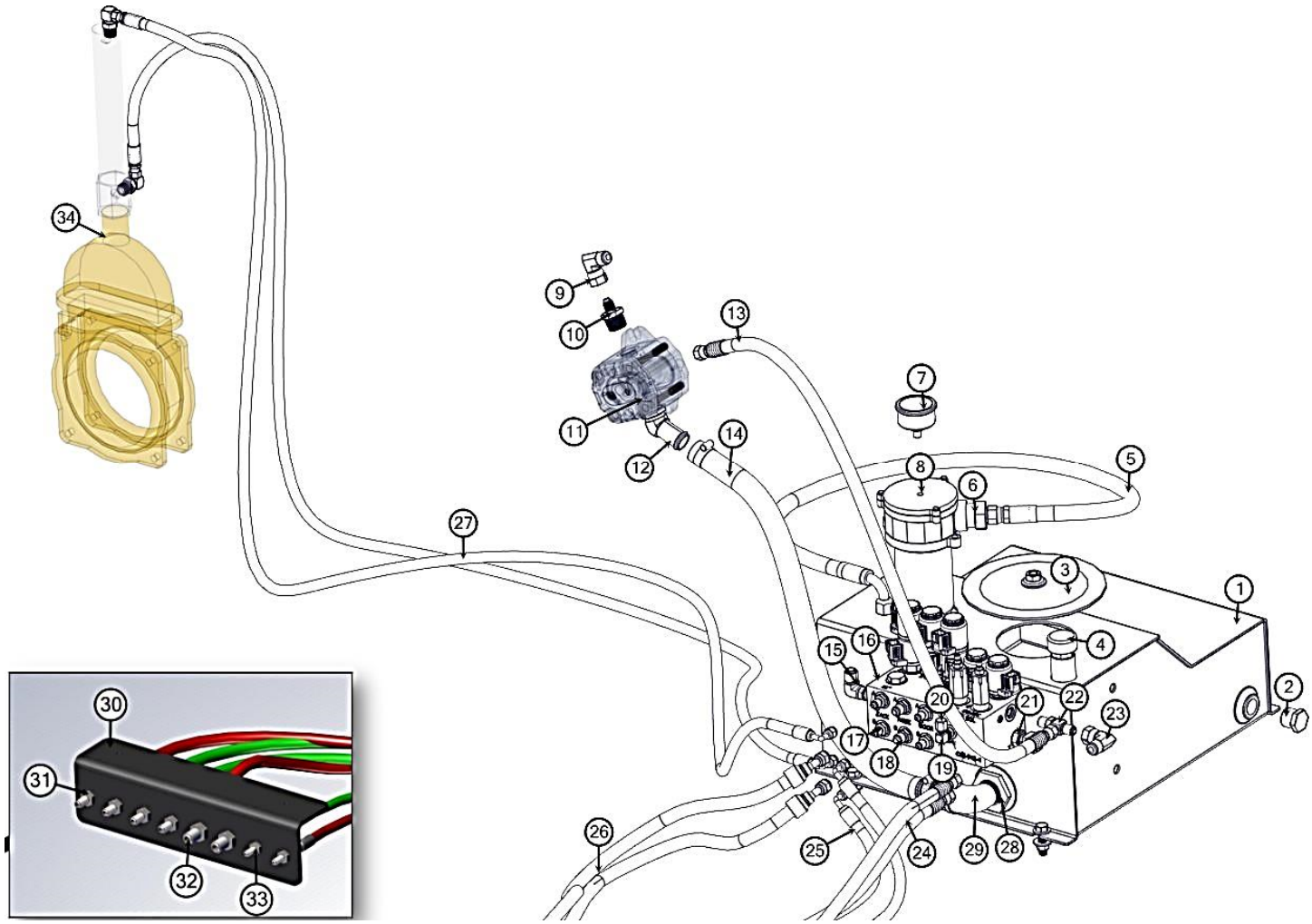

VX200 HYDRAULIC PUMP ASSEMBLY

BOM ID	Qty	Name
1	1	8093054 WELDMENT, TANK HYD 9 GAL.
2	1	T405065 PLUG, 3/4"MP
3	1	4800758 CLEANOUT COVER
4	1	8047330-14 CAP, PLASTIC GRAY
5	1	8047766 HOSE ASSY VAC 8-20" ST-90
6	1	T400240 REDUCER, 16MB-8MJ
7	1	8047456-1 GAUGE, FILTER DIAL
8	1	8047456 FILTER, HYD OIL AUX HYD
9	1	T401228 ELBOW 90 6MJ-6FJ
10	1	T400085 REDUCER 12MP_6MJ
11	1	8092259 PUMP, GEAR 8.4CC CCW DEERE
12	1	8043964 ELBOW, 45 1"HB-3/4"MB
13	1	8042179 HOSE ASSY VAC 6-36" ST-ST
14	1	T300180-30.00 HOSE, WIRE BRAIDED #16-30"LG
15	1	T401260 ELBOW, 90 6MB-8MJ
16	1	8048690-02 MANIFOLD ASSY BOOM LWR (CROSS 3)
17	4	T400550 REDUCER, 6MB-4MJ
18	2	T400037 UNION, 6MB-6MJ
19	1	T401230 ELBOW, 90 4MB-4MJ
20	1	T405200 CAP, 1/4" FJIC HEX HEAD
21	1	T401250 ELBOW, 90 6MB-6MJ
22	1	T402148 TEE, 6MB-6MJ-6MJ
23	1	T401228 ELBOW 90 6MJ-6FJ
28	1	8011058 STRAINER SUCTION 1 1/2"OD X 1"ID
29	1	T420080 ELBOW, STREET 1"MP - 1"FP 90 DEG
30	1	8094275 HOSE CONNECTION PLATE
31	4	T400391 BULKHEAD 6MJ_6MJ
32	2	T400387 BULKHEAD 8MJ_8MJ
33	2	T400385 BULKHEAD 4MJ_4MJ
34	1	8043577 VALVE, GATE 6" W/HYD. CYLINDER DBL ACT

VX200 SPOIL TANK & DOOR ASSEMBLY

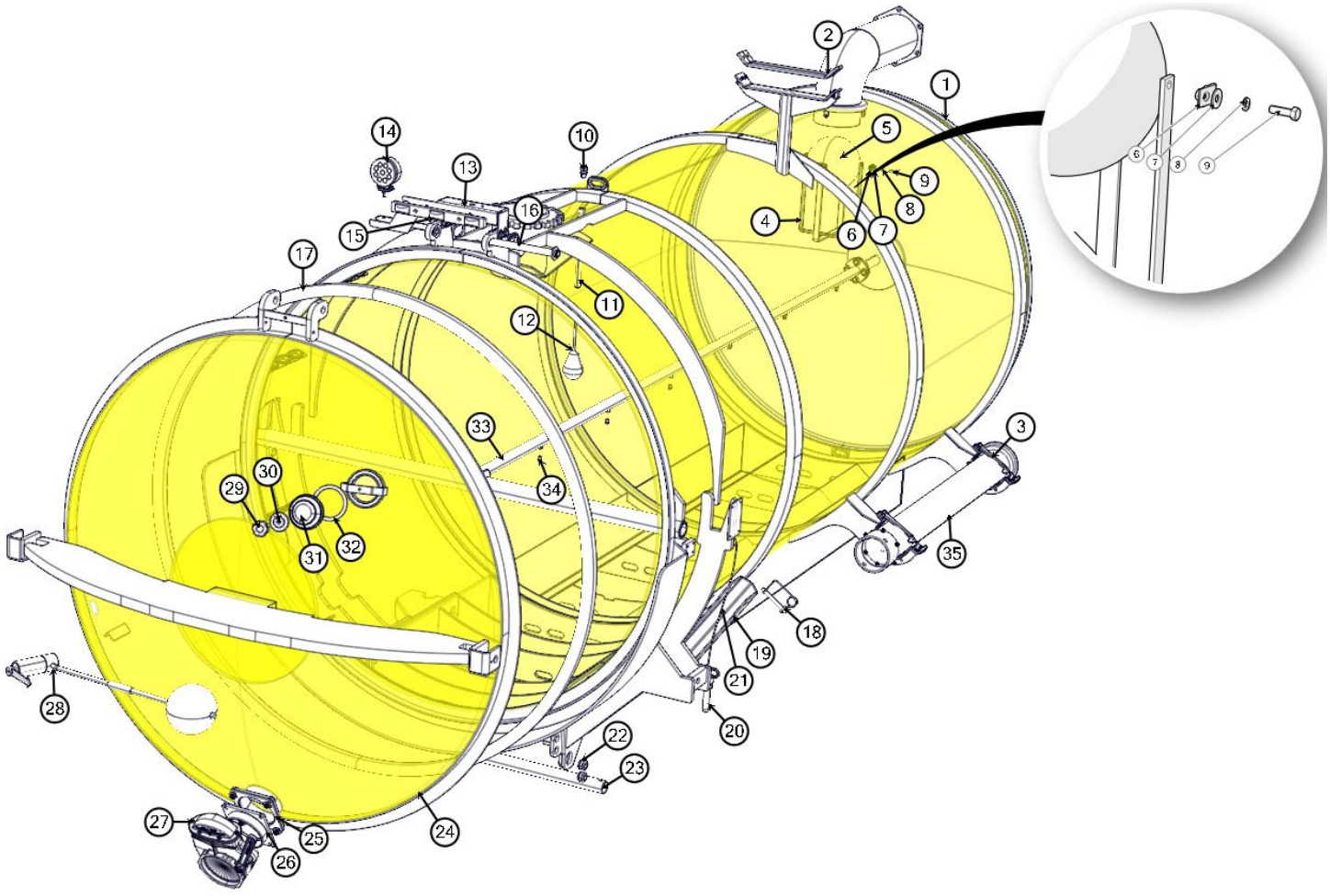

VX200 SPOIL TANK & DOOR ASSEMBLY

BOM ID	Qty	Description	
1	1	8092754	SPOIL TANK 3000 72"OD
2	2	8047711	STRIP, RUBBER BOOM FOOT
3	2	8095189	LATCH, DRAW RUBBER
4	1	8092438	CAGE, FLOAT BALL 10"
5	1	8043686	BALL FLOAT 10"OD STAINLESS
6	4	U100062	NUT, CLIP .375-16
7	4	U200060	WASHER, FLAT .375 ZP
8	4	U210060	WASHER, LOCK .375 ZP
9	4	U000440	SCREW, HC .375-16 X 1.25 ZP G5
10	1	X000113	STRAIN RELIEF 1/2NPT .250-.375
11	1	8040769	TUBE TANK FULL SWITCH 8"
12	1	8030531	SWITCH FLUID LEVEL
13	1	8047253	STROBE LIGHT BRACKET 250 (STRONGARM)
14	1	8093939	LIGHT, WORK OPTILUX 5RD
15	1	8041509	LIGHT, TANK CLEARANCE 3 BAR
16	1	8040058	DOOR HINGE ROD
17	1	8044676	SEAL, DOOR
18	1	8044978	PIN, SAFETY 3/8 X 4"
19	1	8047520	TANK SAFETY BRACE
20	2	8041626	PIN, HITCH 1" X 4 1/2"
21	2	8093841	LANYARD CABLE 30"LG
22	4	8041686	GROMMET, 1"ID X 1 1/2"OD X 1/2"WOG
23	1	8092765	ROD, TANK PIVOT
24	1	8046283	WELDMENT, SPOIL TANK DOOR
25	1	8046191	GASKET, DOOR LE INLET/OUTLET
26	1	8046199	GATE VALVE TANK FLANGE 6"
27	1	8030849	VALVE, 6" GATE BRASS LEVER TYPE
28	1	8092325	SPOIL FLOAT GAUGE
29	1	8031046	SCREW, HANDWHEEL SIGHTGLASS
30	1	8031047	PLATE, SIGHTGLASS
31	1	8031048	SIGHTGLASS, 5" GLASS ONLY
32	1	8032007	GASKET, 4" FLAT ALUM COUPLER
33	1	8047634	ROD,TANK 3000 WELDMENT
34	6	8030369	NOZZLE, TANK CLEANOUT .20" X 40DEG X 1/4MP
35	1	8093709	ASSEMBLY, TOOL SUCTION 6"

VX200 HYDRAULIC ARM ASSEMBLY

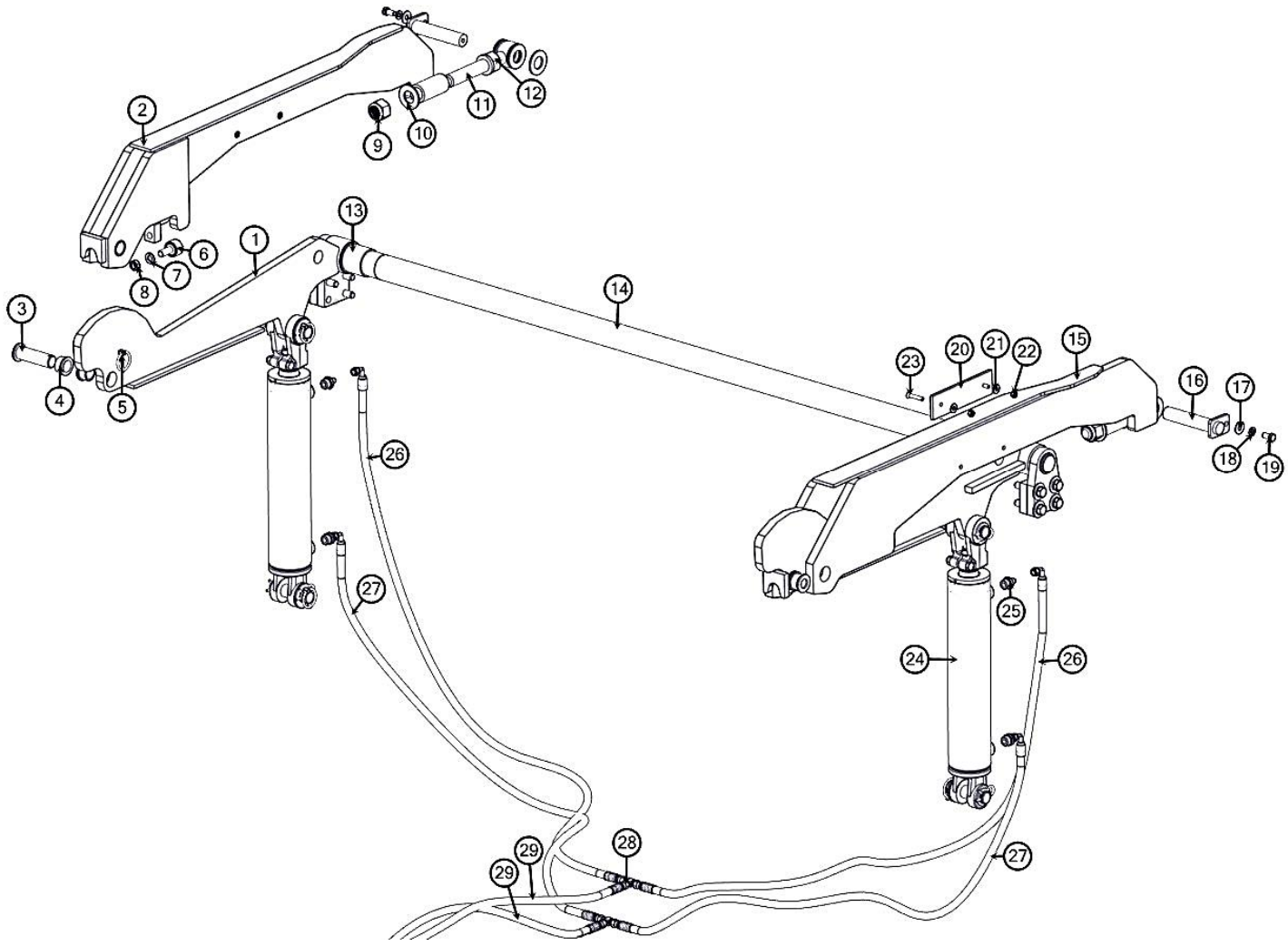

VX200 HYDRAULIC ARM ASSEMBLY

BOM ID	Qty	Name	
1	1	8047958	LINKAGE ARM SHORT (RIGHT) WELDMENT
2	1	8044867	LINKAGE ARM LONG (CURB) WELDMENT
3	6	8042489	CYLINDER PIN
4	8	8041883	BUSHING BRONZE 1.25 X 1.00 X .63 FL
5	6	U340050	PIN LINCH 3/16 X 1 9/16 ZP
6	2	W000020	BEARING, CAMROL 1.25"
7	2	U210100	WASHER, LOCK .500 ZP
8	2	U160015	NUT, JAM .500-20
9	2	U120060	NUT, LOCK 1.00-8 NY ZP G2
10	12	U200170	WASHER, FLAT 1.00
11	2	8043131	ROD END 1"-8 X 7 1/2"LG
12	2	U100240	NUT, HEX 1.00-8 ZP G2
13	2	8041602	BUSHING BRONZE 2.25 X 2.00 X 2.00 FL
14	1	8093597	LINKAGE CROSS TUBE WELDMENT
15	1	8044868	LINKAGE ARM LONG (STREET) WELDMENT
16	2	8043844	CYLINDER PIN FLANGED 1" X 5 1/2"LG
17	2	U200060	WASHER, FLAT .375 ZP
18	2	U210060	WASHER, LOCK .375 ZP
19	2	U000400	SCREW, HC .375-16 X .75 ZP G5
20	2	8047449	PLASTIC STRIP HYD DOOR GUIDE
21	4	U200020	WASHER, FLAT .250 ZP
22	4	U120000	NUT, LOCK NY .250-20 ZP G2
23	4	U030018	SCREW, SFH .250-20 X 1.50 ZP
24	2	8092326	CYLINDER, HYD 3" X 12"
25	4	T400611	REDUCER, 8MB-4MJ
26	2	8044763	HOSE ASSY VAC 4-60" ST-90
27	2	8093184	HOSE ASSY VAC 4-55" ST-90
28	2	T402035	TEE 4MJ_4MJ_4MJ
29	2	8042354	HOSE ASSY VAC 4-160" ST-ST

*NOT SHOWN
2 - 8090251 FITTING, ORFICE 0.020 4MB-4MJ

VX200 FILTRATION ASSEMBLY

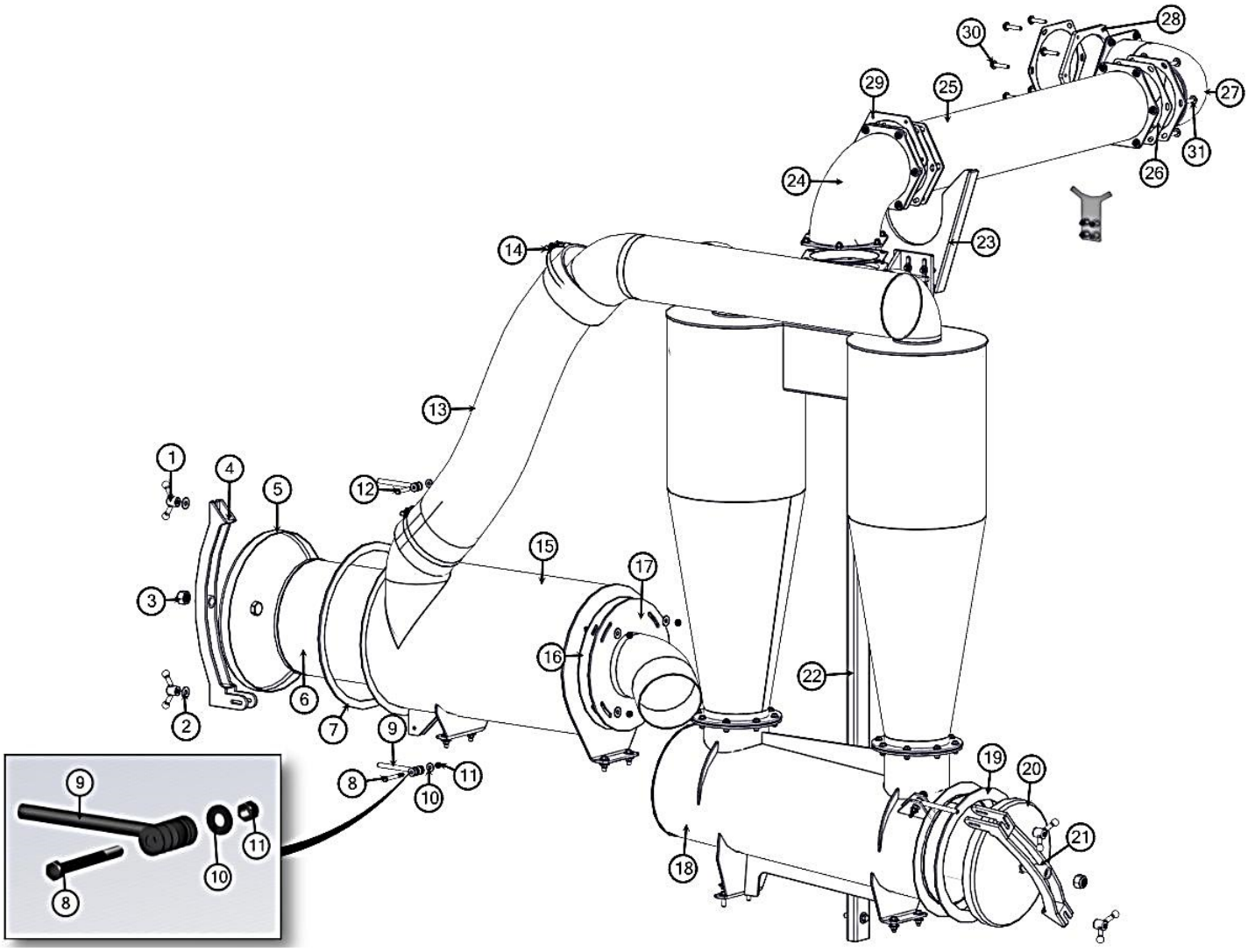

VX200 FILTRATION ASSEMBLY

BOM ID	Qty	Name	
1	4	8041594	HANDLE, WING REV FLOW CYC/FILTER
2	2	U200100	WASHER, FLAT .500 ZP
3	2	U120060	NUT, LOCK 1.00-8 NY ZP G2
4	1	8092007	LATCH, AIR FILTER 3000 CFM SINGLE
5	1	8092009	DOME, AIR FILTER 3000 CFM SINGLE
6	1	8092258	FILTER, AIR 14.5 X 32
7	1	8092008	GASKET, AIR FILTER HD VX200
8	2	U000580	SCREW, HC .375-16 X 3.50 ZP G5
9	4	8041593	BOLT, EYE 1/2-13 X 6"
10	20	U200060	WASHER, FLAT .375 ZP
11	4	U120110	NUT, LOCK .375-16 NY ZP
12	2	U000520	SCREW, HC .375-16 X 2.25 ZP G5
13	1	8093023	HOSE VAC AG SUCTION 8" X 54 1/2"LG
14	2	8092896	CLAMP, T-BOLT 8" HOSE
15	1	8092282	AIR FILTER 3000 CFM SINGLE
16	1	8092815	GASKET, AIR FILTER OUTLET
17	1	8092661	WELDMENT, AIR FILTER OUTLET
18	1	8091639	CYCLONE ASSEMBLY 3000 CFM
19	1	8041612	GASKET, REV FLOW CYCLONE
20	1	8041402	DOME, CYCLONE REV FLOW
21	1	8041552	LATCH, CYCLONE DOME REV FLOW
22	1	8092843	BRACE, REC TUBE (CYCLONE)
23	1	8093047	WELDMENT, FILTRATION SUPPORT
24	1	8092431	FILTRATION ELBOW WELDMENT 2
25	1	8092888	WELDMENT, PIPE FILTRATION LONG
26	6	8092436	GASKET, FILTRATION CONNECTION
27	1	8092430	FILTRATION ELBOW WELDMENT 1
28	2	8092892	FILTRATION SPACER PLATE
29	1	8092916	FILTRATION CONNECTION PLATE
30	12	U000520	SCREW, HC .375-16 X 2.25 ZP G5
31	12	U000460	SCREW, HC .375-16 X 1.50 ZP G5

VX200 WATER TANK ASSEMBLY

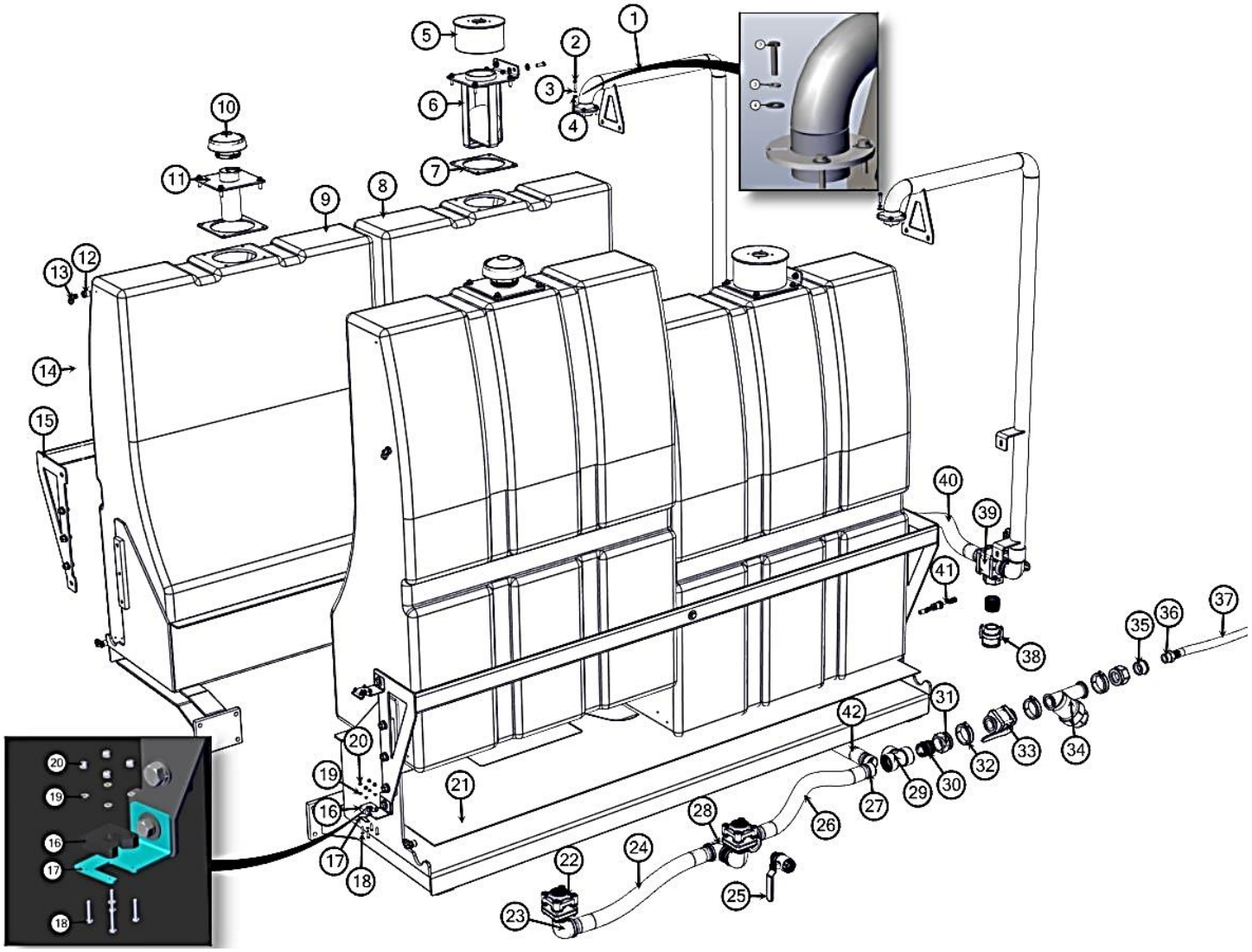

VX200 WATER TANK ASSEMBLY

BOM ID	Qty	Name
1	2	8094480 QUICKFILL 200 GALLON WELDMENT
2	8	U000080 SCREW, HC .250-20 X 1.25 ZP G5
3	8	U210020 WASHER, LOCK .250 ZP
4	8	U200020 WASHER, FLAT .250 ZP
5	2	8094105 QUICKFILL ATTACHMENT WELDMENT
6	2	8094485 FLOAT BALL ASSEMBLY
7	4	8094558 GASKET, SADDLE TANK CHECK VALVE
8	1	8094439 TANK, WATER RIBBED POLY 400 GALLON
9	1	8094439 TANK, WATER RIBBED POLY 400 GALLON
10	2	8091506-01 CAP, AIR IN-TAKE
11	2	8094462 WELDMENT, WATER TANK VENT
12	4	T400024 ADAPTER STR -8MP -6FP STEEL GALV
13	4	T320310 6HOSE_6MP
14	2	8093015-056.00 TUBE, VINYL 3/8"ID X 1/2"OD X 56"
15	2	8094466 BRACE, WATER TANK WELDMENT
16	2	8094246 GRIPPER, WAND/LANCE
17	2	8094606 TOOL HOLDER PLATE
18	8	U030794 SCREW, PAN HD PHIL #8-32 X 1.00
19	16	U030801 WASHER, FLAT #8
20	8	U030800 NUT, LOCK NY #8-32
21	2	8094135 STRIP, ISOLATOR SADDLE TANK
22	4	8049750 BULKHEAD, 2" BOT. DRAIN BANJO
23	6	T420125 ELBOW, STREET 2"MP-2"FP 90 DEG
24	2	8043398-030.00 HOSE VAC CLEAR VINYL 2-30"
25	2	8045813 VALVE, BALL 1 1/4" M X F BRASS
26	1	8043398-027.00 HOSE VAC CLEAR VINYL 2-27"
27	8	T410115 FITTING, 2"MNPT X 2"BARB STEEL
28	4	8094550 TEE, 2"NPT BLACK IRON
29	1	8090204 FITTING, TEE 2" BANJO
30	6	8030409 NIPPLE, CLOSE 2" SCHD 40 IRON
31	2	8030996 MANIFOLD, 2" BANJO FEMALE ADAPT
32	3	8031000 CLAMP, 2" BANJO WORM
33	1	8030998 VALVE, 2" BALL-MANIFOLD
34	1	8031001 STRAINER, Y 2" FLANGE 80 MESH
35	1	8043843 REDUCER, 2"MP X 1 1/4"FP GALV
36	1	8041312 FITTING, 1 1/4"MP - 1 1/4"HB
37	1	8043076 HOSE VAC CLEAR VINYL 1 1/4-37"
38	1	8031219 COUPLING, 2" ALUM MP X FCAMLOCK
39	1	8094548 VALVE, 3-WAY 2"NPT BANJO
40	1	8046676-069.00 HOSE AG SUCTION 2-69"LG
41	2	8090896 SWITCH, WATER LEVEL (HORIZ)
42	1	8043398-058.00 HOSE VAC CLEAR VINYL 2-58"LG

VX200 WATER TANK ASSEMBLY

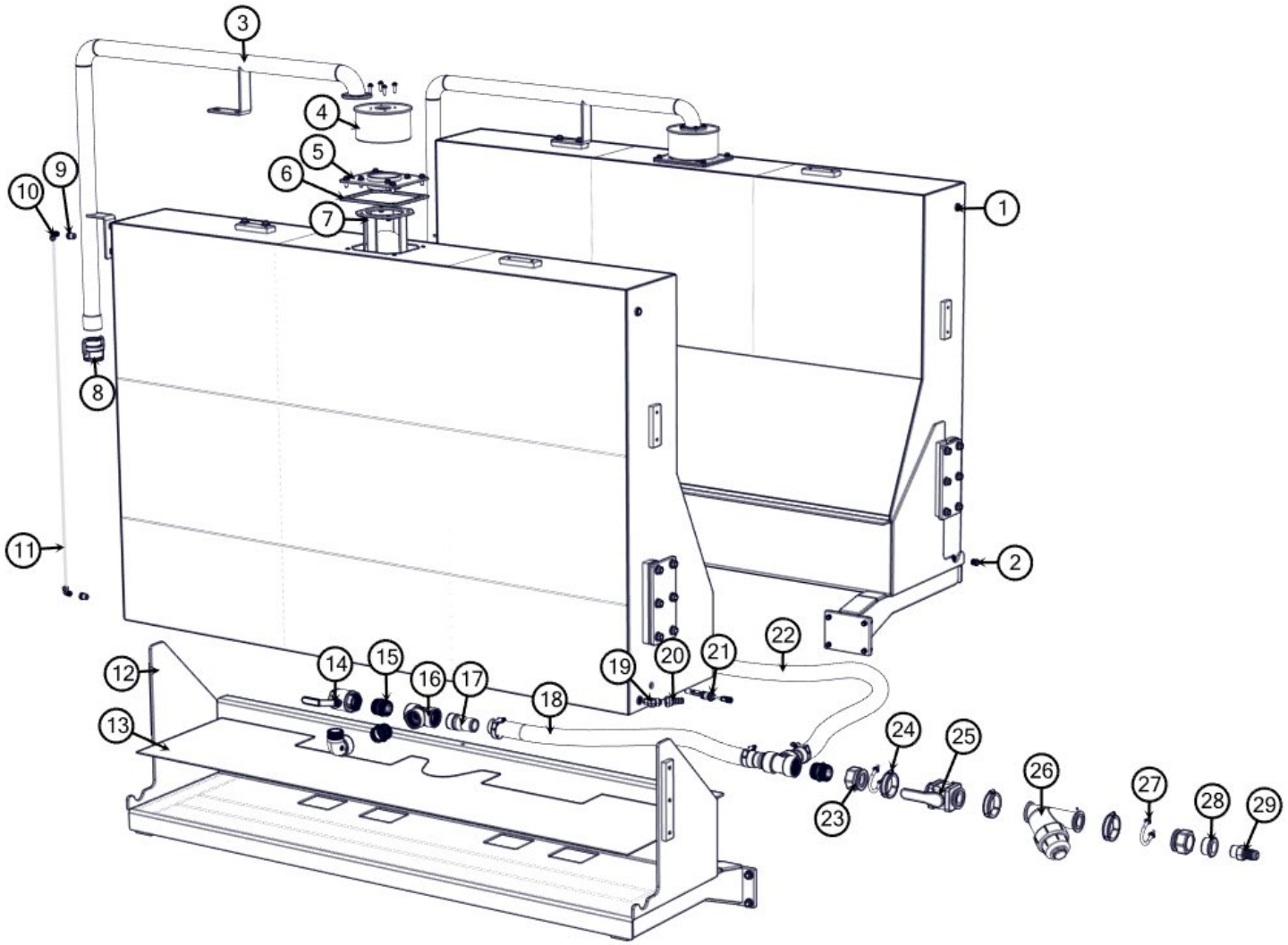

VX200 WATER TANK ASSEMBLY

BOM ID	Qty	Name
1	2	8093820 TANK, WATER 400 GALLON
2	3	T405062 PLUG, 1/2" NPT HEX SOCKET HD
3	2	8093821 WELDMENT, QUICKFILL 400 GAL
4	2	8094105 WELDMENT, QUICKFILL ATTACHMENT
5	2	8092757 WELDMENT, FLANGE SADDLE TANK
6	2	8092760 GASKET, INLET SADDLE TANK
7	2	8092764 ASSEMBLY, FLOAT BALL SADDLE TN
8	2	8031219 COUPLING, 2" ALUM MP X FCAMLOCK
9	4	T400024 ADAPTER STR -8MP -6FP STEEL GALV
10	4	T320310 6HOSE_6MP
11	2	8093015-050.00 TUBE, VINYL 3/8"ID X 1/2"OD
12	2	8092650 SADDLE TANK ATTACHMENT
13	2	8094135 STRIP, ISOLATOR SADDLE TANK
14	2	8090233 VALVE, BALL 2" W/LEVER HANDLE
15	4	8093019 FITTING, NIPPLE PIPE 2" SHORT
16	3	8090204 FITTING, TEE 2" BANJO
17	4	T410115 FITTING, 2"MNPT - 2"BARB STEEL
18	1	8043398-050.00 HOSE VAC CLEAR VINYL 2"- 50"LG
19	1	T401561 ELBOW, 45 1/2"MP - 3/4"MJ
20	1	8030525 FITTING, PUSHLOK #12
21	1	8090896 SWITCH, WATER LEVEL (HORIZ)
22	1	8043398-091.00 HOSE VAC CLEAR VINYL 2" - 91"LG
23	2	8030996 MANIFOLD, 2" BANJO FEMALE ADAPTOR
24	3	8031000 CLAMP, 2" BANJO WORM
25	1	8030998 VALVE, 2" BALL-MANIFOLD
26	1	8031001 STRAINER, Y 2" FLANGE 80 MESH
27	2	8031373 CLAMP, U-BOLT 2.5" EXHAUST
28	1	8043843 REDUCER, 2"MP - 1 1/4"FP GALV
29	1	8041312 FITTING, 1 1/4"MP - 1 1/4"HB

VX200 WATER REEL ASSEMBLY

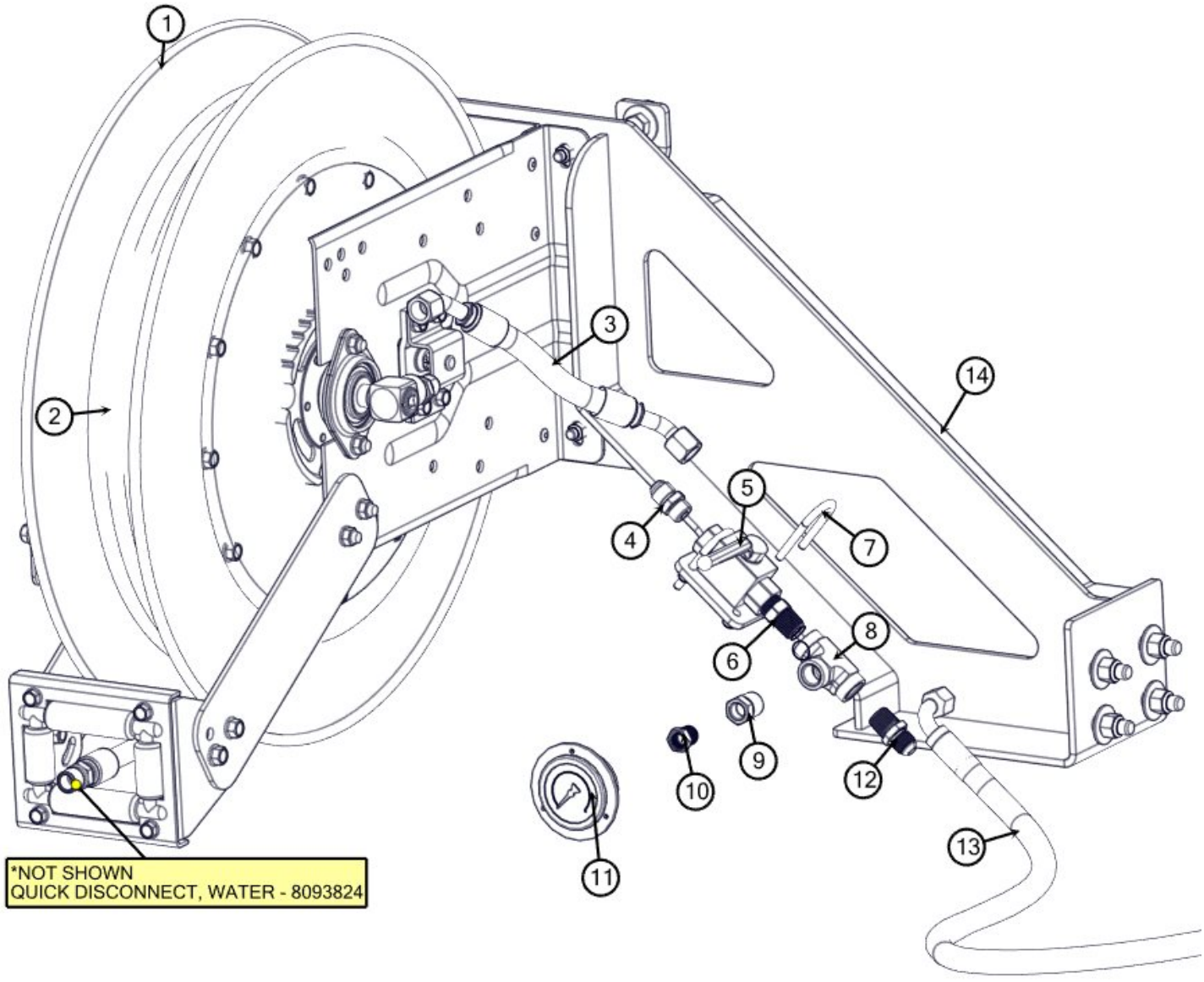

VX200 WATER REEL ASSEMBLY

BOM ID	Qty	Name	
1	1	8092722	REEL ONLY SPRGDRVN 1/2" X 75'
2	1	8094735	HOSE, REEL 1/2"-75'
3	1	8094534	HOSE ASSY VAC 8-8" 45-45
4	1	T400140	UNION, 8MB-8MJ
5	1	8031197	VALVE, BALL 1/2" 3000 PSI MIN
6	1	T404020	UNION, 8MP-8MP
7	2	U010017	U-BOLT, .250-20
8	1	T402130	TEE, 8FP-8FP-8FP
9	1	T400024	REDUCER, 1/2"MP-3/8"FP
10	1	T400023	REDUCER, 6MP-4FP
11	1	8030372	GAUGE, 5000 PSI 2.5"LF CBM
12	1	T400040	UNION, 8MP-8MJ
13	1	8094533	HOSE ASSY VAC 8-210" ST-90
14	1	8094450	VERTICAL WATER REEL MOUNT WELDMENT

*NOT SHOWN
1 - 8093824 FITTING, QD WATER 1/2"F - 1/2"FP

VX200 TOOLS ASSEMBLY

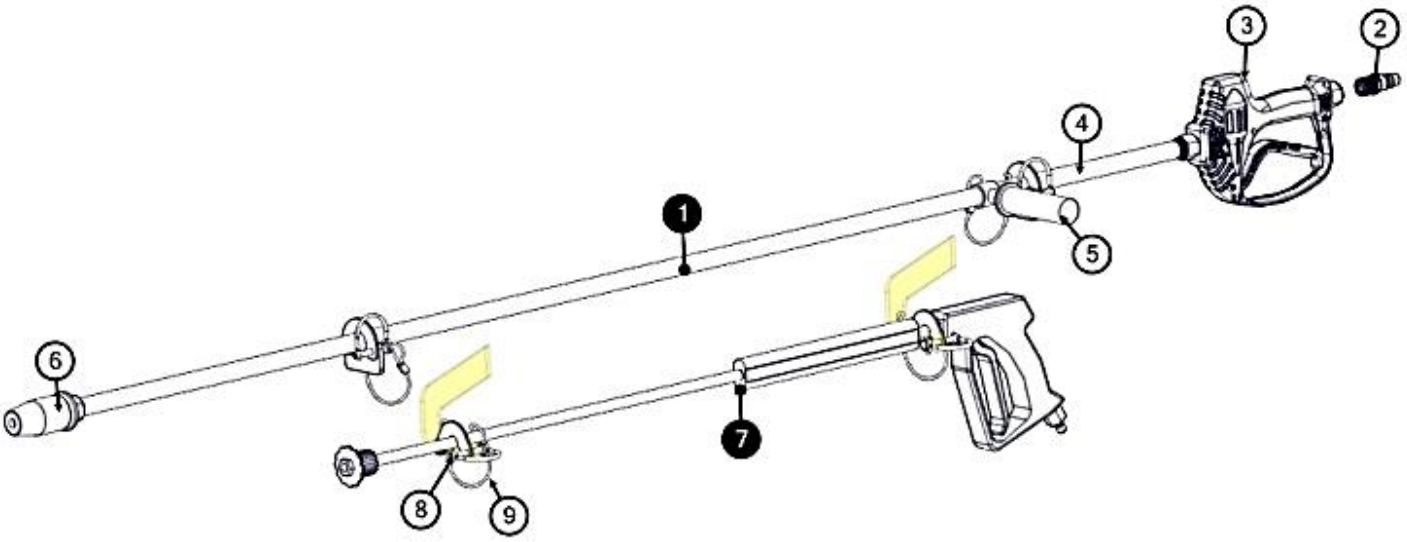

BOM ID	Qty	Name	
1	1	8093810	LANCE ASSEMBLY 72"
2	1	8093823	FITTING, QD WATER 1/2"M-1/2"MP
3	1	8093263	GUN, LANCE
4	1	8093261	ROD, LANCE
5	1	8093262	HANDLE, LANCE
6	1	8093109	NOZZLE, TURBO 1/2"FPT
7	1	8094780	VAC TOOL WASH WAND COMPLETE
8	4	8093706	PIN LINCH 1/4" X 1 3/4" W/WIRE LOCK
9	4	8093703	CABLE, LANYARD 11"LG

PAGE LEFT BLANK

VX200 BOOM TURRET ASSEMBLY

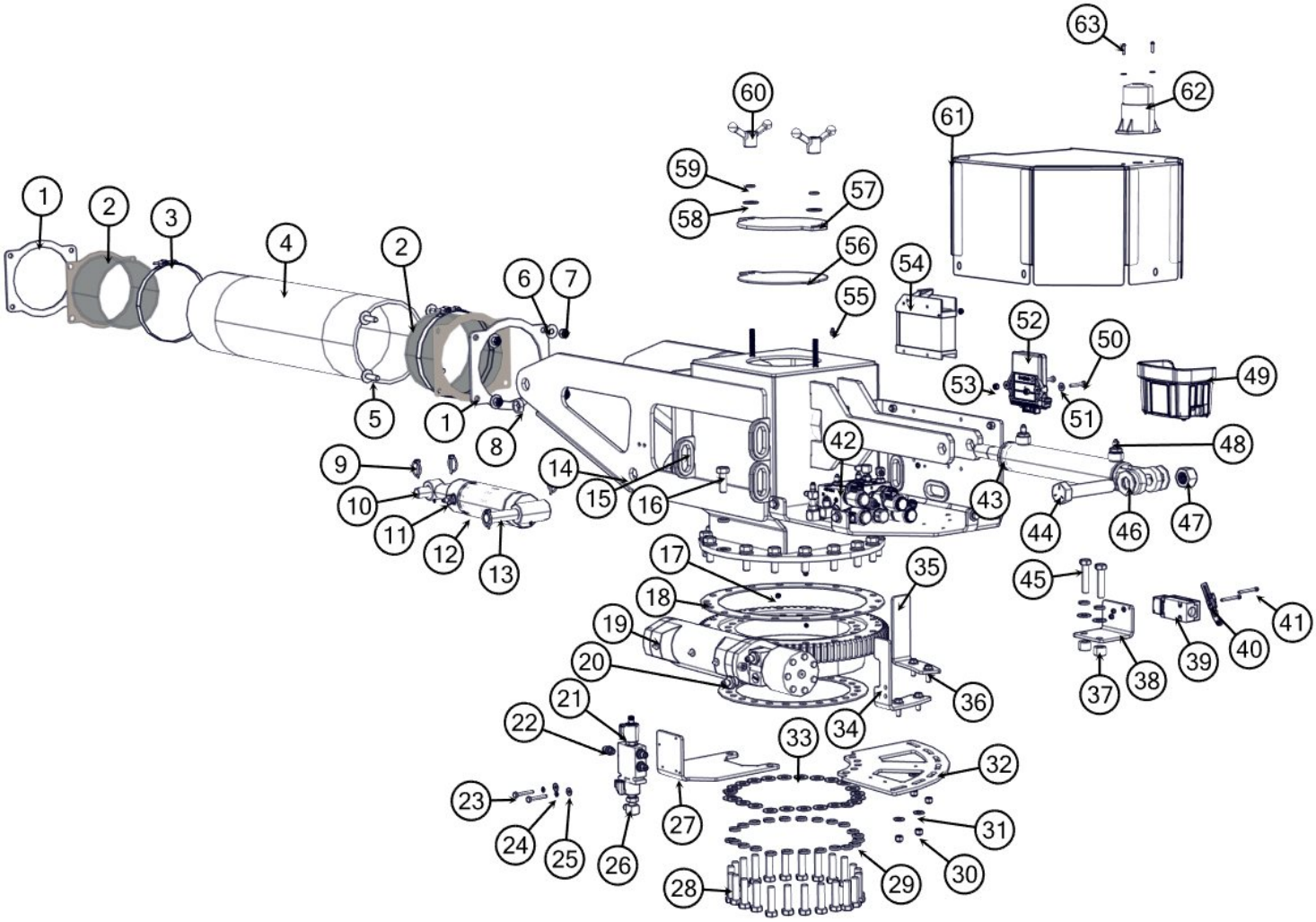

VX200 BOOM TURRET ASSEMBLY

BOM ID	Qty	Name
1	2	8095790 GASKET, BOOM 8" HOSE ADAPTER
2	2	8095767 WELDMENT, BOOM 8" HOSE ADAPTER
3	2	8092896 CLAMP, T-BOLT 8" HOSE
4	1	8092966-032.50 HOSE AG SUCTION 8" X 32.50"LG
5	4	U000880 SCREW, HC .500-13 X 2.00 ZP G5
6	8	U200100 WASHER, FLAT .500 ZP
7	4	U160018 NUT, LOCK .500-13 NY ZP
8	2	8094000 BUSHING, BRONZE 1.25 X 1.00 X .375 CUT
9	4	U340050 PIN LINCH 3/16 X 1 9/16 ZP
10	1	8041990 BOOM PIVOT CYL ROD PIN
11	2	T400611 REDUCER, 8MB - 4MJ
12	1	8046597 CYLINDER, HYD BOOM 3 X 6
13	1	8041977 BOOM PIVOT CYL BASE PIN
14	1	8095752 WELDMENT, BOOM 8" TURRET
15	5	8042812 GROMMET, 2"ID X 3"OD X 1/4"WOG
16	16	U001195 SCREW, HC .625-11 X 1.75 ZP G5
17	2	T500020 FITTING, GREASE .125 STR 1/8"-27 NPT
18	1	8043780 GASKET, BOOM BRG TOP BIG 16.5"
19	1	8042231 BEARING, BOOM HYD ROT ASSY
20	2	T400035 REDUCER, 10MB - 6MJ
21	1	8094016 MANIFOLD, HYD BOOM 6" ASSEMBLY
22	3	T400037 UNION, 6MB-6MJ
23	2	U000110 SCREW, HC .250-20 X 1.75 ZP G5
24	2	U210020 WASHER, LOCK .250 ZP
25	2	U200020 WASHER, FLAT .250 ZP
26	1	T401250 ELBOW, 90 6MB - 6MJ
27	1	8042344 BOOM HYD MANIFOLD MTG PLATE
28	24	U001210 SCREW, HC .625-11 X 2.25 ZP G5
29	42	U210140 WASHER, LOCK .625 ZP
30	4	U110060 NUT, ST .375-16 ZP G2
31	8	U200060 WASHER, FLAT .375 ZP
32	1	8042351 BOOM ROTATION STOP BASE PLATE

BOM ID	Qty	Name
33	42	U200150 WASHER, FLAT .625 ZP SAE HARD
34	1	8042357 BOOM ROTATION STOP BRACKET
35	1	8042359 BOOM ROTATION STOP BRACKET OPP
36	4	U000440 SCREW, HC .375-16 X 1.25 ZP G5
37	2	8042376 SPACER, LIMIT SWITCH BRACKET BOOM
38	1	8042360 BRACKET, BOOM LIMIT SWITCH
39	1	8042431 SWITCH, LIMIT BOOM
40	1	8042432 SWITCH LIMIT BOOM ADJ LEVER
41	2	U010016 SCREW, HSH #10-24 X 2.25
42	1	8094056 MANIFOLD, BOOM UPPER ASSEMBLY
43	1	8095770 CYLINDER, 2" X 10" 1 1/8" ROD
44	1	U001570 SCREW, HC 1-8 X 5.00 ZP
45	2	U001240 SCREW, HC .625-11 X 2.75 ZP G5
46	2	U200170 WASHER, FLAT 1.00
47	1	U120060 NUT, LOCK 1.00-8 NY ZP G2
48	2	T400611 REDUCER, 8MB - 4MJ
49	1	8094018 TRANSMITTER, MINI MBT BOOM 6"
50	2	U000100 SCREW, HC .250-20 X 1.50 ZP G5
51	4	U200020 WASHER, FLAT .250 ZP
52	1	8094017 RECEIVER, CAN 2 BOOM W/ ANTENNA
53	2	U120000 NUT, LOCK NY .250-20 ZP G2
54	1	8092952 CONTROLLER IFM CAN (BOOM)
55	1	T500030 FITTING, GREASE .125 NPT STR
56	1	8095788 GASKET, BOOM 8" TURRET CLEANOUT
57	1	8095789 PLATE, BOOM 8" TURRET CLEANOUT
58	2	U200100 WASHER, FLAT .500 ZP
59	2	U210100 WASHER, LOCK .500 ZP
60	2	8041594 HANDLE, WING REV FLOW CYC/FILTER
61	1	8094006 WELDMENT, BOOM COVER NO SWITCH
62	1	8043139 LIGHT, STROBE LED DEUTSCH
63	2	U030809 SCREW, PAN HD PHIL 10-24 X .75

VX200 BOOM MANIFOLD ASSEMBLY

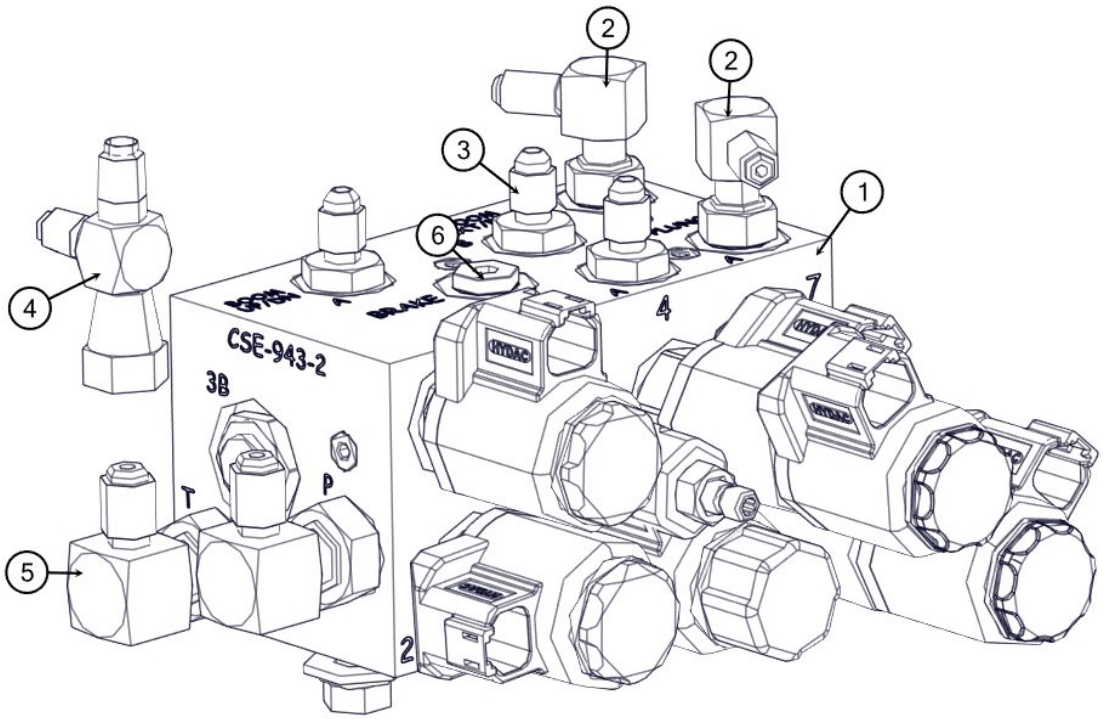

BOM ID	Qty	Name	
1	1	8094056	MANIFOLD, BOOM UPPER ASSEMBLY
2	2	T401240	ELBOW, 90 6MB (ADJ) - 4MJ
3	3	T400550	REDUCER, 6MB-4MJ
4	1	T402153	TEE, 6FJ - 6MJ - 6MJ
5	2	T401250	ELBOW, 90 6MB - 6MJ
6	1	T405092	PLUG, 3/8"MB-HEX SOCKET HOLLOW

VX200 BOOM HOSE ASSEMBLY

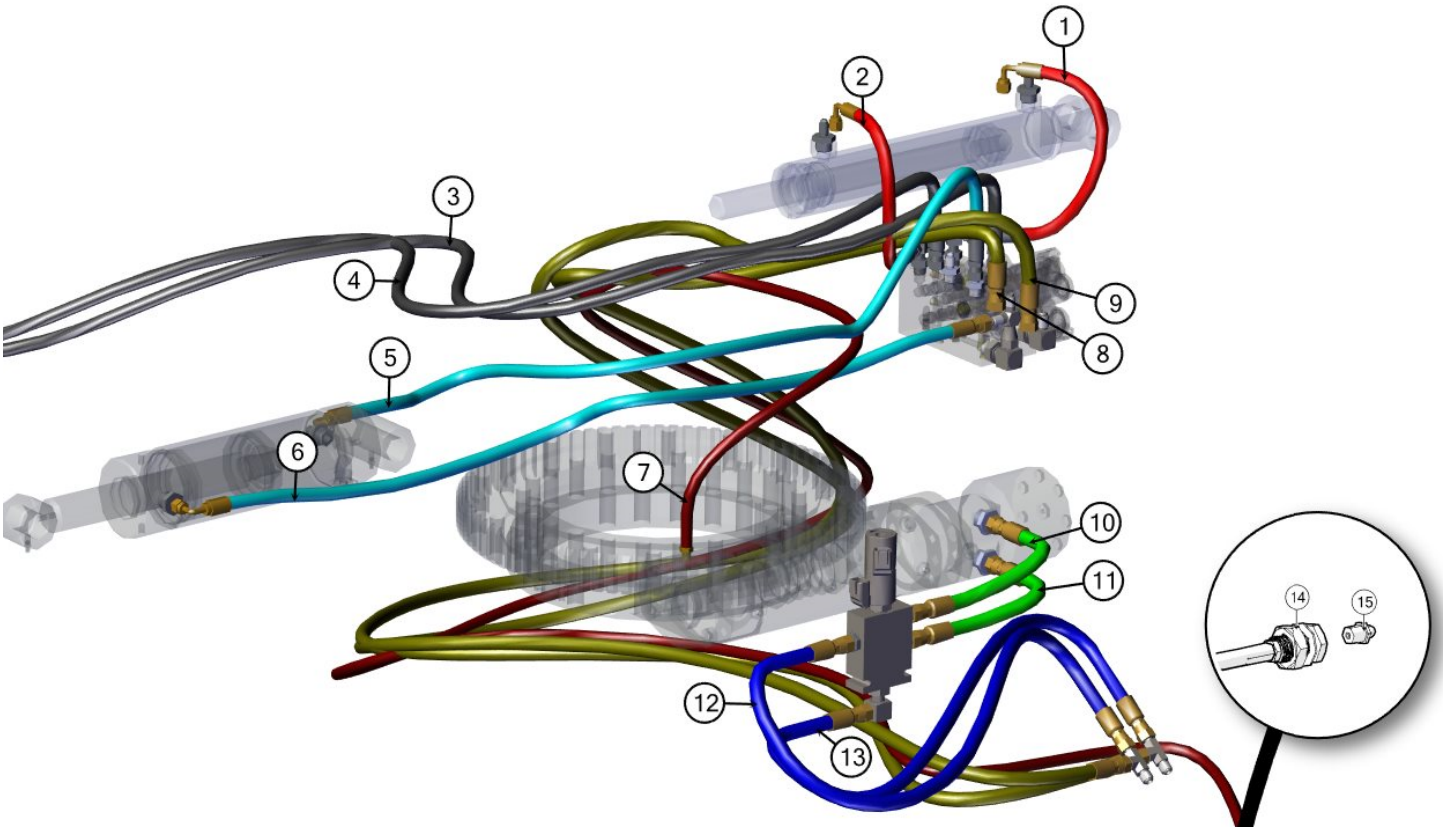

BOM ID	Qty	Name
1	1	8047948 HOSE ASSY VAC 4-9 ST-90
2	1	8047949 HOSE ASSY VAC 4-11 ST-90
3	1	8047951 HOSE ASSY VAC 4-95 ST-90
4	1	8049374 HOSE ASSY VAC 4-120" ST-90
5	1	8047714 HOSE ASSY VAC 4-38" ST-90
6	1	8047714 HOSE ASSY VAC 4-38" ST-90
7	1	8049946-180.00 HOSE, FUEL 5/16" X 180"
8	1	8044133 HOSE ASSY VAC 6-120 ST-ST
9	1	8044133 HOSE ASSY VAC 6-120 ST-ST
10	1	8041061 HOSE ASSY VAC 6-9" ST-ST
11	1	8041061 HOSE ASSY VAC 6-9" ST-ST
12	1	8042179 HOSE VAC ASSY 6-36 ST-ST
13	1	8042179 HOSE VAC ASSY 6-36 ST-ST
14	1	T400383 BULKHEAD, 1/4"FP X 1/4"FP
15	1	T500100 FITTING, GREASE.250 NPT STR

VX200 BOOM PIVOT ARM ASSEMBLY

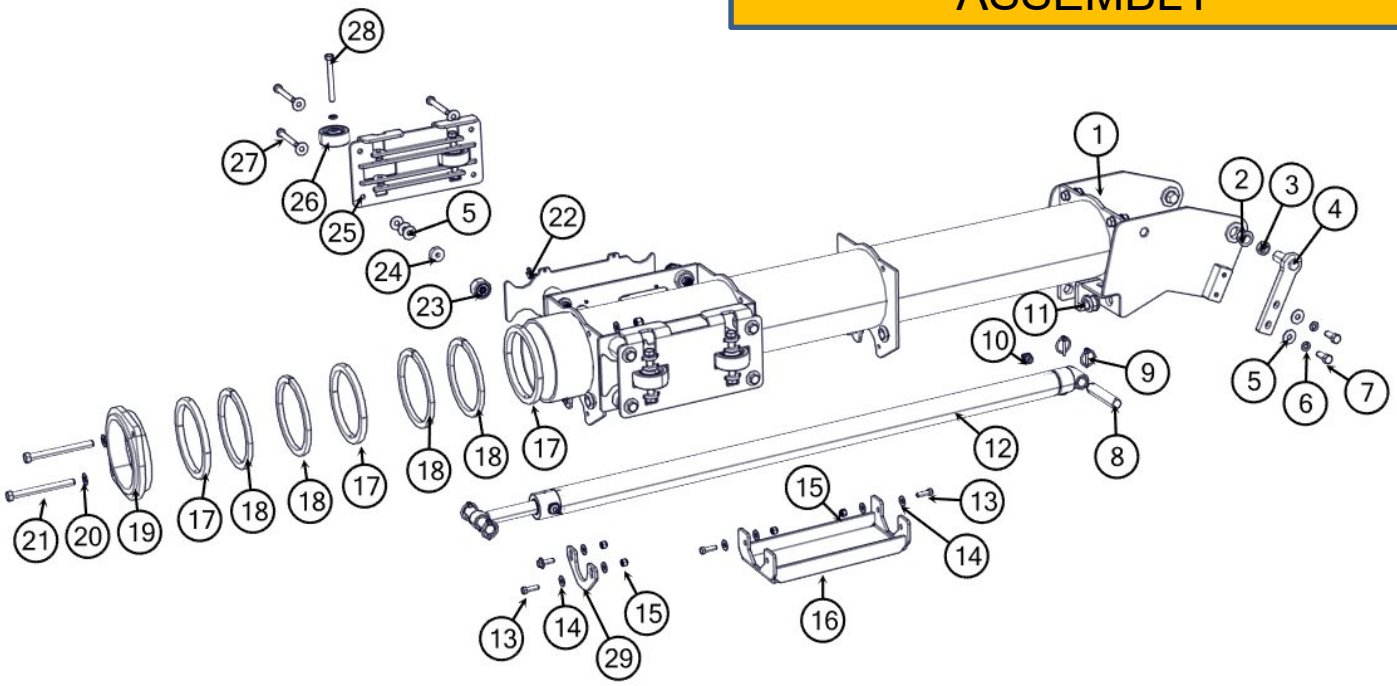

BOM ID	Qty	Name	
1	1	8095772	WELDMENT, BOOM 6" PIVOT ARM
2	2	8041883	BUSHING, BRONZE 1.25 X 1.0 X .63 FL
3	2	8094000	BUSHING, BRONZE 1.25 X 1.00 X .375 CUT
4	2	8046634	BOOM PIVOT PIN LP
5	32	U200100	WASHER, FLAT .500 ZP
6	8	U210100	WASHER, LOCK .500 ZP
7	4	U000820	SCREW, HC .500-13 X 1.25 ZP G5
8	2	8041990	BOOM PIVOT CYLINDER ROD PIN
9	4	U340050	PIN LINCH 3/16X1-9/16 ZP
10	2	T400611	REDUCER, 8MB - 4MJ
11	5	8041686	GROMMET, 1"ID 1 1/2"OD-1/2"WOG
12	1	8041926	CYLINDER, HYD BOOM 2" X 48"
13	6	U000440	SCREW, HC .375-16 X 1.25 ZP G5
14	11	U200060	WASHER, FLAT .375 ZP
15	5	U110060	NUT, ST .375-16 ZP G2
16	1	8095279	WELDMENT, BOOM FOOT
17	3	8092142	SLEEVE, PLASTIC 6" BOOM
18	4	8092143	BOOM, 6" PACKING RING
19	1	8091441	WELDMENT, PACKING GLAND 6" BOOM
20	12	U200110	WASHER, FLAT .500 ZP SAE HARD
21	2	U001020	SCREW, HC .500-13 X 5.50 ZP G5
22	2	T500100	FITTING, GREASE .250 NPT STR
23	4	W000055	BEARING, CAMROL 1.75 X 1.0 X 0.50
24	4	8046624	BOOM CAM ROLLER SPACER LP
25	2	8046627	BOOM EXTENSION ARM CAPTURE LP
26	4	8030226	WHEEL, PLASTIC FLUIDSWEEPER 3" X 1 1/4" X 1/2"BORE
27	8	U000960	SCREW, HC .500-13 X 4.00 ZP G5
28	4	U000980	SCREW, HC .500-13 X 4.50 ZP G5
29	1	8041956	PLATE, BOOM PIVOT ARM CYL RETURN

VX200 BOOM EXTENSION ARM ASSEMBLY

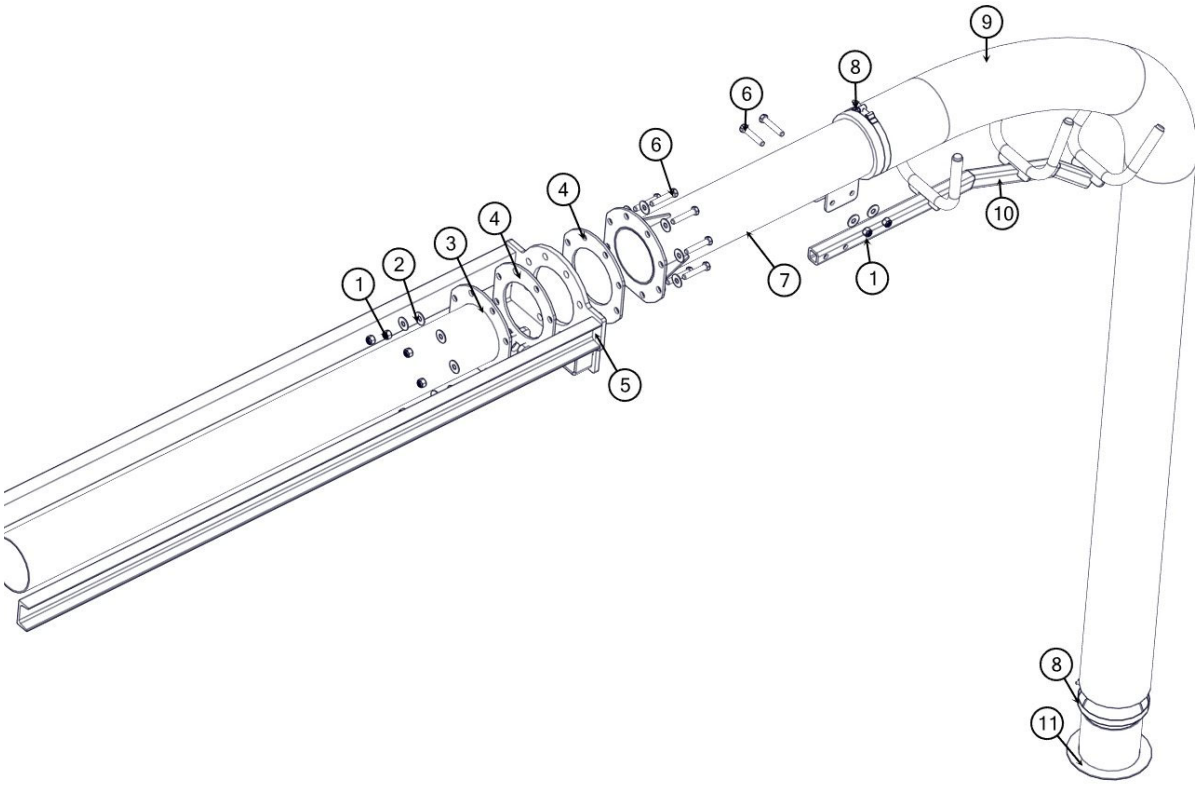

BOM ID	QTY.	PART NUMBER	DESCRIPTION
1	10	U160018	NUT, LOCK 1/2-13 NY ZP
2	20	U200100	WASHER FLAT 1/2 ZP
3	1	8092375	BOOM, EXTENSION WELDMENT
4	2	8092939	GASKET, BOOM
5	1	8095779	WELDMENT, BOOM, 6", EXTENSION
6	10	U000920	SCREW, HC 1/2-13x2.75 ZP G5
7	1	8095782	WELDMENT, BOOM, 6", EXTENSION, LONG
8	2	8043198	CLAMP HOSE T-BOLT 700
9	1	8096849-120.00	HOSE, MATERIAL HANDLING, 6" X 120" LONG
10	1	8097041	WELDMENT, CRADLE, BOLT-ON
11	1	8093018	WELDMENT, BOOM HOSE CONNECTION

VX200 HOTBOX ASSEMBLY

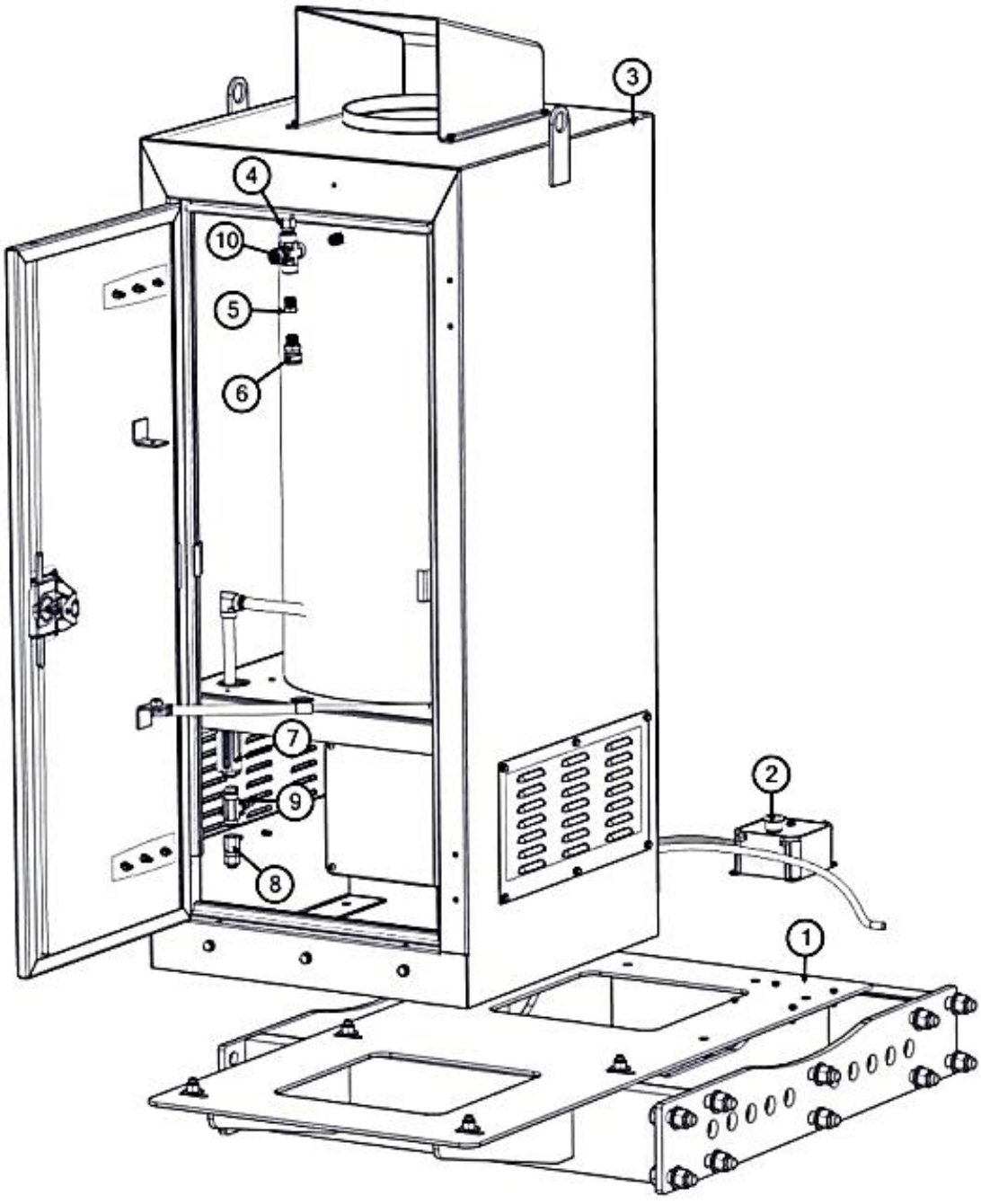

VX200 HOTBOX ASSEMBLY

BOM ID	Qty	Name
1	1	8093747 WELDMENT, SKID HOTBOX VX200
2	1	8093136-01 HOTBOX ESTOP
3	1	8093136 HOTBOX, DYNABLAST 420K
4	1	8093136-02 HIGH LIMIT (110C)
5	1	8093136-03 BUSHING, 1/2" X 3/8"
6	1	8093136-04 QUICK COUPLER, FEMALE 3/8"
7	1	8093136-05 FLOW SWITCH
8	1	8093136-06 QUICK COUPLER, MALE 3/8"
9	1	8093136-07 RELIEF VALVE
10	1	8093136-10 TEMPERATURE SENSOR RTD

*NOT SHOWN		
8093136-08	1	IGNITER
8093136-09	1	COIL
8093136-10	1	ELECTRODE KIT
X200204	1	HARNESS, HOTBOX

PAGE LEFT BLANK

WARRANTY
RETURN GOODS POLICY

LIMITED WARRANTY
The Manufacturer warrants its products to be free from defects in material and workmanship for a period of twelve months from the date of shipment from the factory. The Manufacturer shall not be responsible for any damage resulting to or caused by its products by reason of installation, improper storage, unauthorized service, alteration of the products, neglect or abuse, or use of the product in a manner inconsistent with its design. The warranty does not extend to any component parts not manufactured by Manufacturer; however, Manufacturer's warranty herein shall not limit any warranties made by manufacturers of component parts which extend to Buyer.

Claims for defects in material and workmanship shall be made in writing to Manufacturer within ten days of discovery of defect. Manufacturer may either send a service representative or have the product returned to its factory at Buyer's expense for inspection. Upon notification of defect, Manufacturer will issue a return goods authorization number to Buyer. The return goods authorization number must accompany the product returned. If judged by the Manufacturer to be defective in material or workmanship, the product will be replaced or repaired at the option of the Manufacturer, free from all charges except authorized transportation. Buyer shall be responsible for all maintenance services consisting of lubrication and cleaning of equipment, replacing expandable parts, making minor adjustments, and performing operating checks, all in accordance with procedures outlined in Manufacturer's maintenance literature.

THE FOREGOING WARRANTY IS IN LIEU OF ALL OTHER WARRANTIES AND NO REPRESENTATIONS, GUARANTEES, OR WARRANTIES, EXPRESS OR IMPLIED, (INCLUDING BUT NOT LIMITED TO A WARRANTY OF MERCHANTABILITY OR FITNESS FOR A PARTICULAR PURPOSE), ARE MADE BY THE MANUFACTURER IN CONNECTION WITH THE MANUFACTURE OR SALE OF ITS PRODUCTS. NO EMPLOYEE, DISTRIBUTOR, OR REPRESENTATIVE IS AUTHORIZED TO CHANGE THIS WARRANTY ON BEHALF OF MANUFACTURER.
THE REMEDIES OF BUYER SET FORTH HEREIN ARE EXCLUSIVE AND ARE IN LIEU OF ALL OTHER REMEDIES. THE LIABILITY OF MANUFACTURER WHETHER IN CONTRACT, TORT, UNDER ANY WARRANTY, OR
OTHERWISE SHALL NOT EXTEND BEYOND ITS OBLIGATION TO REPAIR OR REPLACE, AT ITS OPTION ANY PRODUCT OR PART FOUND BY MANUFACTURER TO BE DEFECTIVE IN MATERIAL OR WORKMANSHIP. MANUFACTURER SHALL NOT BE LIABLE FOR COST OF INSTALLATION AND/OR REMOVAL OR BE RESPONSIBLE FOR DIRECT, INDIRECT, SPECIAL OR CONSEQUENTIAL DAMAGES OF ANY NATURE.

GENERAL RETURNS OF MERCHANDISE

1. All returns must be pre-authorized
   A. Please call our parts department for an RGA number
   B. Please include RGA number on the outside of box
   C. Include any required paper work or special instructions
   D. Items returned without an RGA number will not be accepted
2. All returns are subject to a 20% restock charge.
3. Special items are non-returnable
   A. Non-stock parts
   B. Custom parts
   C. If you are unsure about a parts status when ordering, ask your McLaughlin representative if the item fits on of the above conditions.
4. Items must be returned within thirty days of original order date.
5. Items not returned within 30 days from the date of RGA is issued will not be accepted.
6. The item(s) must be in new condition. Used item(s) are not returnable.

Maintenance Record

DATE	SERVICE PERFORMED	BY

Notes

FOR SCHEMATICS SEE: www.mclaughlinunderground